GAME 1299
FO 749

Bally®

BABY PAC-MAN *TM

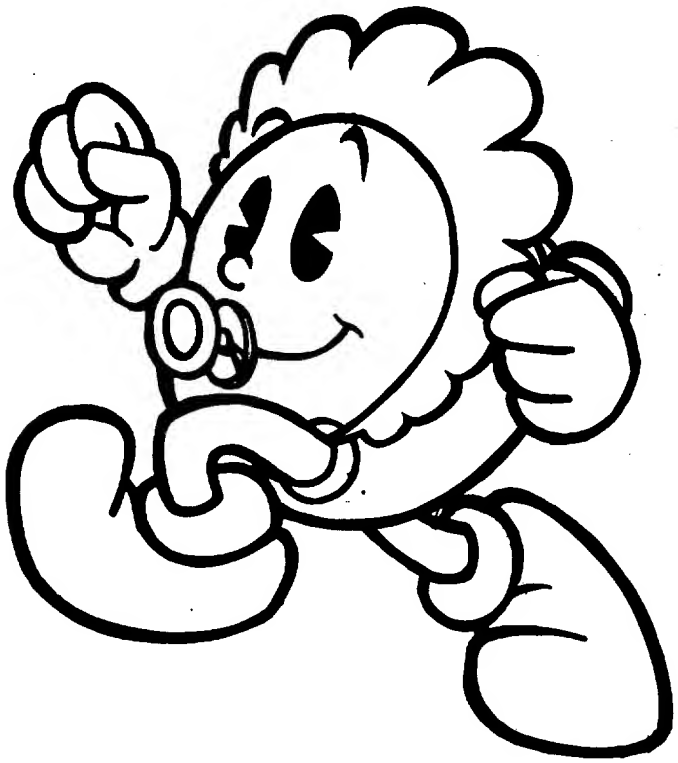

Bally

PINBALL DIVISION

©BALLY MFG. CORP. 1982
ALL RIGHTS RESERVED

*TM of BALLY MIDWAY MFG. CO
©1980/1981 BALLY MIDWAY MFG. CO.
ALL RIGHTS RESERVED

90 O'Leary Drive, Bensenville, Illinois 60106, U.S.A.
Telephone: (312) 860-6400

Installation and General Game Operation Instructions

INDEX

		PAGE
I.	INSPECTION	1
II.	GENERAL GAME OPERATION	2
III.	BOOKKEEPING FUNCTIONS	3
IV.	FEATURE OPERATION AND SCORING	4
V.	GAME ADJUSTMENTS	5
	A. PLAYFIELD ADJUSTMENTS	5
	B. BACKBOX ADJUSTMENTS	5
	CREDITS/COIN	5
	MAXIMUM CREDITS	6
	PAC-MEN/GAME	6
	CREDIT DISPLAY	6
	SPECIAL FEATURE OPTION	6
	HIGH SCORE TO DATE	6
	GAME FEATURE OPTIONS	7
	GAME FEATURE SETTINGS	7
	SOUND OPTION	8
	C. FRONT DOOR GAME ADJUSTMENTS	
	HIGH SCORE FEATURE	8
	HIGH SCORE TO DATE FEATURE	8
VI.	ROUTINE MAINTENANCE ON LOCATION	11
VII.	TROUBLESHOOTING ON LOCATION	11
VIII.	SERVICE/PARTS	17
IX.	PARTS LIST	18-26
	VIDIOT MODULE—THEORY OF OPERATION	27-30
	MONITOR SERVICE	31-34
	SCHEMATICS	

BLOCK DIAGRAM—VIDPIN

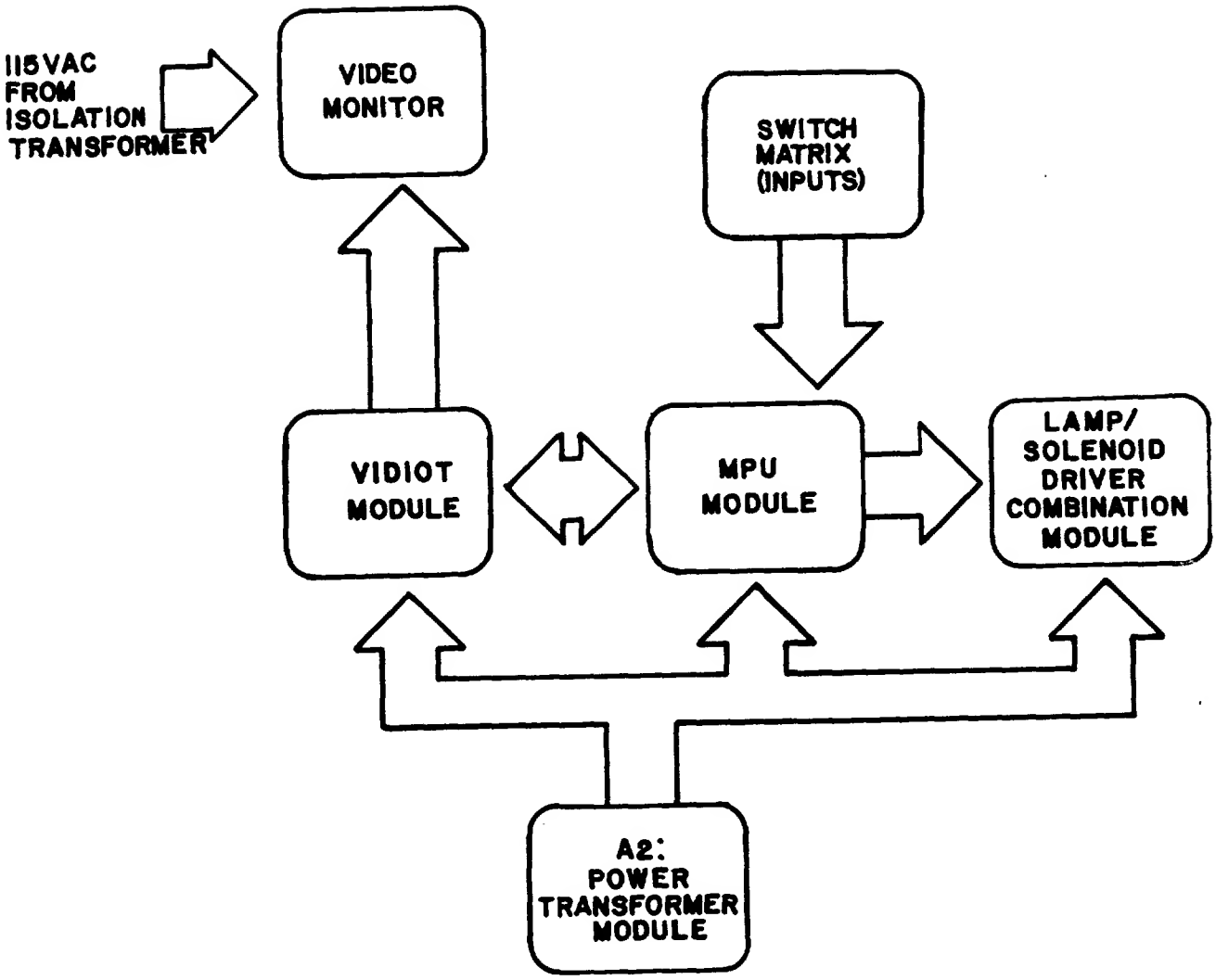

I. INSPECTION

On all games there are certain items that should be checked after shipment. These are visual inspections which may avoid time consuming service work later. Minor troubles caused by abusive handling in shipment are unavoidable. Cable connectors may be loosened, switches (especially tilt switches) may go out of adjustment. Plumb bob tilt switch should always be adjusted after game is set on location and leg levelers are adjusted.

Visual inspections before plugging in line cord:

1. Check that all cable connectors are completely seated on printed circuit assemblies.
2. Check that cables are clear of all moving parts.
3. Check for any wires that may have become disconnected.
4. Check switches for loose solder or other foreign material that may have come loose in shipment and could cause shorting of contacts.
5. Check wires on coils for proper soldering. Cold solder connections may not show up in factory inspection, but vibration in shipment may break contact.
6. Check that fuses are firmly seated and making good contact.
7. Check the transformer for any foreign material shorting across wiring lugs.
8. Check wiring of transformer to correspond to location voltage. See figure 1.

Check adjustment of leg levelers such that bottom edge of cabinet is level.

Check adjustment of the two (normally open) tilt switches:

1. Plumb bob tilt on left side of cabinet near front door.

2. Ball tilt above plumb bob tilt. Insert the smaller ball (15/16" dia.) into the ball tilt assembly, and adjust the bracket so the ball will roll free to contact the switch blade, if front of cabinet is raised.

TRANSFORMER CONNECTION INSTRUCTIONS

REFER TO POWER SUPPLY SCHEMATIC IN GAME MANUAL FOR TABLE "A"

115 VAC, 2-8, 3-6, 7-10
120 VAC, 2-8, 4-6, 7-11
220 VAC, 4-8, 7-9
240 VAC, 4-8, 7-11

PART OF POWER—TRANSFORMER MODULE A2, LOCATED IN LOWER CABINET

IIA. GENERAL GAME OPERATION PINBALL

Place ball into playfield by outhole.

Plug in line cord. Move power ON-OFF master switch at rear of cabinet to 'ON' position. The game will play a power-up tune to announce game-readiness. Drop targets are reset, scores are set to zero, and the game is ready for play. Coin game. The game should accept the coin and post credits* for coins accepted (adjustable). Pressing the credit button on the control panel will start game. The 1st player-up lite is lit. A game-up tune* is played to announce play-readiness.

One player is posted for one player start, two players for two player start. The credits are reduced by one each time the credit button is pressed until the credits are reduced to zero.

The pinball is put in play using right flipper button.

The game awards all points earned by the player. If spinner is turning and scoring when the ball hits a target, the spinner and the target scores are awarded.

Play again won during the course of the game are played immediately after the player's regular turn ends. The player-up and/or Pac-Man in play on the screen are not advanced for play again.

Scoring over 10,000,000 gives "High Score to Date" award.
At the end of the game, a 'High Score to Date' is alternately flashed with all 8 top player scores. If the 'High Score to Date' is beat, this feature* awards free games.

Tilting the game results in loss of a Pac-Man. The flippers, etc., go 'dead.' Bonus points are not scored. The purpose of the tilt penalty is to discourage the player from jostling the machine in an attempt to prolong play. Game action becomes normal after the ball kicker assembly serves the ball to the playfield.

Slamming the machine results in loss of the game. All feature lights go out, the game goes 'dead,' and a time delay occurs. The purpose of the time delay is to discourage unnecessary abuse of the machine. After the delay, the 'Game Over' light lites and the power-up tune is played. The time delay occurs anytime the slam switch is made to contact. There is one factory installed slam switch on the front door. (Any number of slam switches could be installed by the operator, to meet his individual requirement.) The switch should be adjusted to have approximately 1/16" gap between the contacts. The weighted blade should be adjusted to attain the desired sensitivity. Opening the gap will reduce sensitivity.

IIB. GENERAL GAME OPERATION VIDEO

With power switch moved to 'on' position, video animation will appear on screen. The animation will sequence between attract animation, game instructions and high score automatically. The player can manually advance the animation by moving the control stick to the right to advance and to the left to hold.

All test and bookkeeping information is displayed on the video monitor as is all scoring. During pinball play the monitor will show scores and feature information, the video play section appears during video game play.

*Some tunes and features can be disabled by operator if so desired. See Back Box Adjustments.
NOTE: Scoring and feature units will differ from game to game.

III. BOOKKEEPING FUNCTIONS

To assist the operator, Bally has inserted certain accounting features into this game. To access these functions, the operator will find a test button mounted on the coin door next to the volume control. Pressing the test button initiates self tests and bookkeeping functions.

FUNCTION
Communications
Lamps Test
Solenoid Test
Sound Test
Switch Test
High Scores List and Arrow Shown
(Press player 2 start button for high score selection)
Coin Credits
Total Plays
High Score Beats
Left Coin Chute Coins
Right Coin Chute Coins
Game Minutes
Total Specials
Service Credits
High Score Mode
Special Mode
Slam Test

At any point, turning game off and/or pressing 17 times exits test mode and returns game for play.

The right coin chute switch clears displayed bookkeeping function to 0. High scores, credits, high score mode, and specials mode, can be increased by holding in player 1 start button. Pressing the test button while increasing a function will decrease it.

5 SERVICE CREDITS can be added by increasing COIN CREDITS. Service credits may be cleared with SW.#33 or the right coin switch when SERVICE CREDITS displayed.

GAME #1299 BABY PAC-MAN

FEATURED OPERATION & SCORING
THE PLAYFIELD FEATURES

The Energizers Feature

An energizer is earned when:

Spelling P-A-C-M-A-N, which is accomplished by knocking down a drop target for one letter or the Loop ball for two letters, after an energizer has been spotted.

Making the Loop ball spots energizer 1 or 4.

Making the inside lane when lit will spot energizer 2 or 4 if energizer 1 or 4 is lit.

The Fruits Feature

Spelling F-R-U-I-T-S qualifies the maze for a fruit and the following then after every time fruits is spelled out. Making fruits also lites the spot center arrow light.

Switch #7 First fruit at start of game.
ON: Liberal OFF: Conservative

The Tunnel Feature

Spelling T-U-N-N-E-L qualifies the maze for open side tunnels. Spelling Tunnel then after will speed up Pac-Man through the Tunnel. Up to 8 different speed levels are available, No. 1-8 are displayed by the Tunnel to indicate the qualified speed.

Switch #8 Tunnel qualified at start of game.
ON: Liberal OFF: Conservative

The Saucer Feature

Making saucer lites the appropriate spinner, the evens-up lane and spots a F-R-U-I-T-S or T-U-N-N-E-L letter. Making saucer when flashing will switch the game over to the maze.

The Extra Baby Feature

Knocking down the center target:
1st time scores 500 pts. and starts the 7 second timer.
2nd time scores 2000 pts. and starts the 6 second timer.
3rd time scores 4000 pts. and starts the 5 second timer.
4th time scores 6000 pts. and starts the 4 second timer.
5th time scores 8000 pts. and starts the 3 second timer.
6th time scores 10K pts. and Extra Ball.

Switch #6 Memory for center arrows Pac-Man to Pac-Man
ON: Liberal OFF: Conservative

Beating the high score to date or the threshold value also awards an Extra Ball.

Switch #24 Playfield drain keeps center arrows
ON: Liberal OFF: Conservative

THE MAZE FEATURES

The Maze

The game starts on the maze and ends on it. A total of 3 Pac-Men are available at the start of the game. At the start of each Pac-Man both escapes are open. The feature earned on the pin are not lost if Pac-Man is eaten.

When eaten the monsters values are as follows:

ONE	: 2000 pts.	THREE:	8000 pts.
TWO	: 4000 pts.	FOUR :	16K

Completing a maze 1st time spots a center arrow and scores 10K.
2nd time spots a center arrow and scores 20K.
3rd time spots a center arrow and scores 30K and awards a special.
4th time spots a center arrow and 40K.
5th time and on spots a center arrow and 50K.

Switch #22 Special given upon completion of X mazes
ON: Switch #23 valid OFF: X = 3

Switch #23 X-Mazes
ON: X = 5 OFF: X = 4

The Escapes

Making the left or right saucer will indicate from which escape Pac-Man enters the maze. The other one is closed.

The Fruits

A total of eight fruits are available. A new fruit is to appear everytime F-R-U-I-T-S is spelled out.

Cherry	— 1000 pts.	Pear	— 10K
Strawberry	— 3000 pts.	Orange	— 20K
Peach	— 5000 pts.	Watermelon	— 30K
Apple	— 7000 pts.	Banana	— 50K

The Dots and Energizers

The Dot is worth 100 points and each energizer is worth 500 points.

Switch #15 Energizer recall Pac to Pac
ON: Liberal OFF: Conservative

SPECIAL SWITCHES

Switch #14 after a ball is ejected 3 times without scoring the ball is lost.
ON: Liberal OFF: Conservative

Switch #16 the pin operates without the video.
ON: Liberal OFF: Conservative

V. GAME ADJUSTMENTS

Back Door Adjustments:

Each game has thirty-two switches located on A4, the MPU module, located in the back door, that allow play to be customized to the location. See Figure III. Credits per coin, credit display, Pac-Men per game, high game feature are selectable by means of the switches. The switches are contained in four-sixteen lead packages numbered S1-8, S9-16, S17-24, and S25-32 for easy identification. The "ON" toggle position is marked on the assembly. **Turn off power before making adjustments.**

CREDITS/COIN ADJUSTMENTS

COIN CHUTE	SWITCHES					CREDITS	CREDITS	CREDITS	CREDITS	CREDITS	TOTAL CREDITS/COINS
(LEFT SIDE)	5	4	3	2	1						
	13	12	11	10	9						
(RIGHT SIDE)	OFF	OFF	OFF	OFF	OFF	1/1 Coin					
	OFF	OFF	OFF	OFF	ON	2/1 Coin					
	OFF	OFF	OFF	ON	OFF	3/1 Coin					
	OFF	OFF	OFF	ON	ON	4/1 Coin					
	OFF	OFF	ON	OFF	OFF	5/1 Coin					
	OFF	OFF	ON	OFF	ON	6/1 Coin					
	OFF	OFF	ON	ON	OFF	7/1 Coin					
	OFF	OFF	ON	ON	ON	8/1 Coin					
	OFF	ON	OFF	OFF	OFF	9/1 Coin					
	OFF	ON	OFF	OFF	ON	12/1 Coin					
	OFF	ON	OFF	ON	OFF	14/1 Coin					
	OFF	ON	OFF	ON	ON	1/2 Coins*					
	OFF	ON	ON	OFF	OFF	2/2 Coins*					
	OFF	ON	ON	OFF	ON	3/2 Coins*					
	OFF	ON	ON	ON	OFF	4/2 Coins*					
	OFF	ON	ON	ON	ON	5/2 Coins*					
	ON	OFF	OFF	OFF	OFF	6/2 Coins*					
	ON	OFF	OFF	OFF	ON	7/2 Coins*					
	ON	OFF	OFF	ON	OFF	8/2 Coins*					
	ON	OFF	OFF	ON	ON	9/2 Coins*					
	ON	OFF	ON	OFF	OFF	12/2 Coins*					
	ON	OFF	ON	OFF	ON	14/2 Coins*					
	ON	OFF	ON	ON	OFF	1/1st Coin	2/2nd Coin				3/2
	ON	OFF	ON	ON	ON	0/1st Coin*	1/2nd Coin	1/3rd Coin	1/4th Coin		3/4
	ON	ON	OFF	OFF	OFF	0/1st Coin*	1/2nd Coin	0/3rd Coin**	2/4th Coin		3/4
	ON	ON	OFF	OFF	ON	1/1st Coin	1/2nd Coin	1/3rd Coin	2/4th Coin		5/4
	ON	ON	OFF	ON	OFF	1/1st Coin	2/2nd Coin	1/3rd Coin	3/4th Coin		7/4
	ON	ON	OFF	ON	ON	1/1st Coin	2/2nd Coin	2/3rd Coin	2/4th Coin		7/4
	ON	ON	ON	OFF	OFF	0/1st Coin***	0/2nd Coin***	1/3rd Coin			1/3
	ON	ON	ON	OFF	ON	0/1st Coin**	0/2nd Coin**	0/3rd Coin**	1/4th Coin		1/4
	ON	ON	ON	ON	OFF	0/1st Coin****	0/2nd Coin****	0/3rd Coin****	0/4th Coin****	1/5th Coin	1/5
	ON	ON	ON	ON	ON	0/1st Coin***	0/2nd Coin***	1/3rd Coin	0/4th Coin****	1/5th Coin	2/5

*No Credits until 2nd coin is dropped.
**No Credits until 4th coin is dropped.
***No Credits until 3rd coin is dropped.
****No Credits until 5th coin is droipped.

MAXIMUM CREDITS:

The maximum credits accepted by the machine is 9.

PAC-MEN PER GAME:	# PAC-MEN/GAME	SWITCHES	32	31
	5		OFF	ON
	4		ON	OFF
	3		OFF	OFF
	2		ON	ON

CREDIT DISPLAY:	CREDITS DISPLAYED	SWITCH 27
	YES	ON
	NO	OFF

SPECIALS OPTION

The game is designed to award a replay, play again, point score, or nothing at # of mazes selected. See Front Door Game Adjustments.

AWARD	SPECIALS MODE
REPLAY	SET TO "03"
PLAY AGAIN	SET TO "02"
NOVELTY (POINTS)	SET TO "01"
NO AWARD	SET TO "00"

HIGH SCORE TO DATE OR OVER 10,000,000 SCORE FEATURE:

The game is designed to award a play again as an option if high score to date is beat or player exceeds 10,000,000 points. Each time this happens, the winning score becomes the new high score to beat. This score is displayed on the screen at the end of each game as an incentive to play. Recommended setting is underlined.

HIGH SCORE TO DATE FEATURE	HIGH SCORE MODE
No Award	SET TO "00"
Scores 50,000	SET TO "01"
Lites Play Again	SET TO "02"
Lites Play Again	SET TO "03"

State and local laws may regulate the use of the above features, and they have been designed to allow for appropriate adjustment in order to conform to such requirements.

FREE PLAY: Game will give free play if switch 30 ON.

1299 BABY PAC-MAN

GAME FEATURE OPTIONS

Center arrows lite recall adjustment:

Liberal	SW.6 ON	Any lites on will come on for next Pac-Man.
Conservative	SW.6 OFF	Any lites on will not come on for next Pac-Man.

Pac maze Cherry adjustment:

Liberal	SW.7 ON	At start of game cherry will show on maze.
Conservative	SW.7 OFF	No cherry at start of maze.

Pac maze side tunnels adjustment:

Liberal	SW.8 ON	At start of game tunnel gates will be open.
Conservative	SW.8 OFF	Gates not open at start of maze.

Outhole ball eject adjustment:

Liberal	SW.14 ON	After 3 ball ejects and no score ball is still in play.
Conservative.	SW.14 OFF	After 3 ball ejects and no score the maze will lite.

Energizers recall lite adjustment:

Liberal	SW.15 ON	Any energizers on will come on for next Pac-Man.
Conservative	SW.15 OFF	Any energizers on will not come on for next Pac-Man.

Playfield, video adjustment: For trouble shooting only.

	SW.16 ON	Playfield will operate only.
	SW.16 OFF	Playfield will operate with video.

Completing maze special award adjustment:

Liberal	SW.22 OFF	Completing 3 mazes awards 1 special.	
Medium	SW.22 ON	SW.23 OFF	Completing 4 mazes awards 1 special.
Conservative	SW.22 ON	SW.23 ON	Completing 5 mazes awards 1 special.

Playfield only center arrows recall adjustment:

Liberal	SW.24 ON	Any arrows on will stay on for next ball in outhole.
Conservative	SW.24 OFF	Any arrows on will go out for next ball in outhole.

RECOMMENDED GAME SETTINGS

Center arrow lite recall	SW.6	OFF
Pac maze cherry	SW.7	ON
Pac maze side tunnels	SW.8	ON
Outhole ball eject	SW.14	ON
Energizers lite recall	SW.15	ON
Playfield, video	SW.16	OFF
Completing maze special award	SW.22	ON
	SW.23	OFF
Playfield only center arrows recall	SW.24	OFF
Pac-Men per game 3	SW.31	OFF
Pac-Men per game 3	SW.32	OFF

C. FRONT DOOR GAME ADJUSTMENTS

High Score Feature Adjustments:

The game is designed to give an award at the high score to date level. Refer to page 6 to determine award given.

Any level from 10,000 to 9,990,000 can be set, as desired. It is also possible to reset or turn off (00) any or all of the levels, if desired.

MODE

It is recommended that the level, which will build with play, be periodically reset to the factory recommended level to encourage game play.

It is to be noted that '00' does NOT turn off the feature, as it does on High Score feature. The feature is turned off by High Score as discussed under Game Adjustments.

1. Push and release Self-Test button (See Figure III) at one second intervals until high scores appears on the Monitor. Arrow indicates high score to be altered. Move arrow by holding in player 2 start button.

2. It can be increased, if desired, by holding the credit button in. To decrease the score level, hold the credit button in and depress and release the Self-Test button. Release the credit button when the desired number appears. Note that the level changes 10,000 points at a time. Players initials for that high score are cleared when score is altered.

SOUND

In addition to game sounds, there is also a Master Volume Control located on the front door (refer to page 10).

Please note that these module volume controls should be adjusted prior to setting the control on the front door.

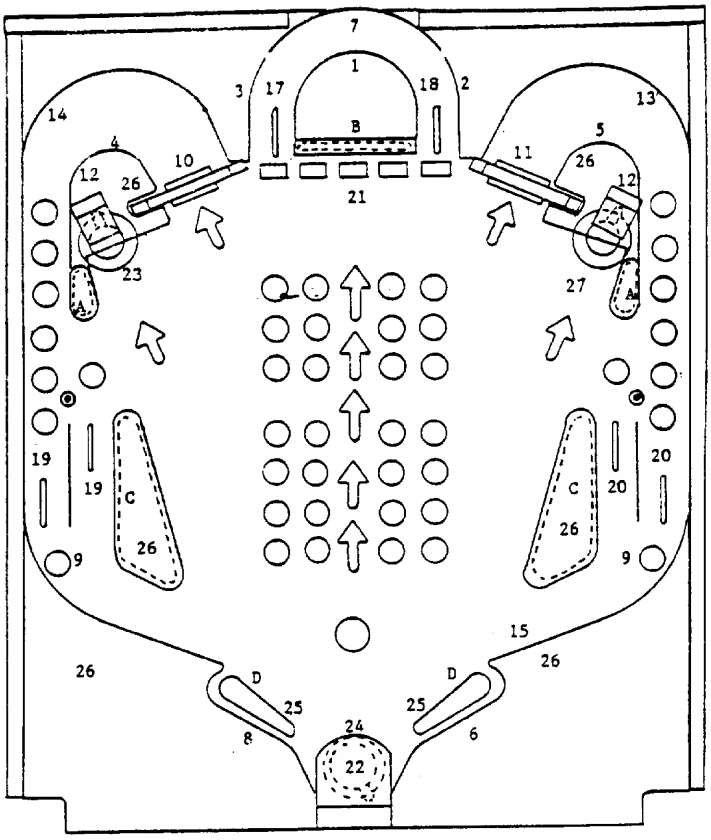

BABY PAC-MAN #1299

RUBBER PARTS

A.	R-521	¾" DIA.	(2)
B.	R-521-2	1½" DIA.	(2)
C.	R-521-4	2½" DIA.	(4)
D.	R-533-3	FLIPPER	(2)
E.	R-243	5/16" DIA.	(2)
F.	R-414	POST	(4)

PANEL PARTS

1.	BALL GUIDE WIRE	M-121-128
2.	BALL GUIDE WIRE	M-121-129
3.	BALL GUIDE WIRE	M-121-130
4.	BALL GUIDE WIRE	M-121-131
5.	BALL GUIDE WIRE	M-121-132
6.	BALL GUIDE WIRE	M-121-133
7.	BALL GUIDE WIRE	M-121-134
8.	BALL GUIDE WIRE	M-121-127
9.	BALL GUIDE WIRE	M-121-27 (2)
10.	SPINNER ASS'Y (L)	ASE-2250-116
11.	SPINNER ASS'Y (R)	ASE-2250-117
12.	BALL STOP BRACKET	P-6661-15 (2)
13.	BALL GUIDE ASS'Y	A-3032-134
14.	BALL GUIDE ASS'Y	A-3032-135
15.	BALL GUIDE ASS'Y	A-3032-136
16.	BALL GUIDE ASS'Y	A-3032-137
17.	ROLLOVER WIRE & BRACKET	ASE-2806-40
18.	ROLLOVER WIRE & BRACKET	ASE-2806-41
19.	ROLLOVER WIRE & BRACKET	ASE-2806-9 (2)
20.	ROLLOVER WIRE & BRACKET	ASE-2806-10 (2)
21.	DROP TARGET & MEMORY ASS'Y	ASE-3038-10
22.	EJECT HOLE ASS'Y	ASE-428-46
23.	EJECT HOLE ASS'Y	ASE-428-41
24.	LIFT-UP BRACKET	P-6442-291
25.	MOLDED FLIPPER	A-3994-5 (2)
26.	SCREENED PLASTICS	M-1330-205
27.	EJECT HOLE ASS'Y	ASE-428-44

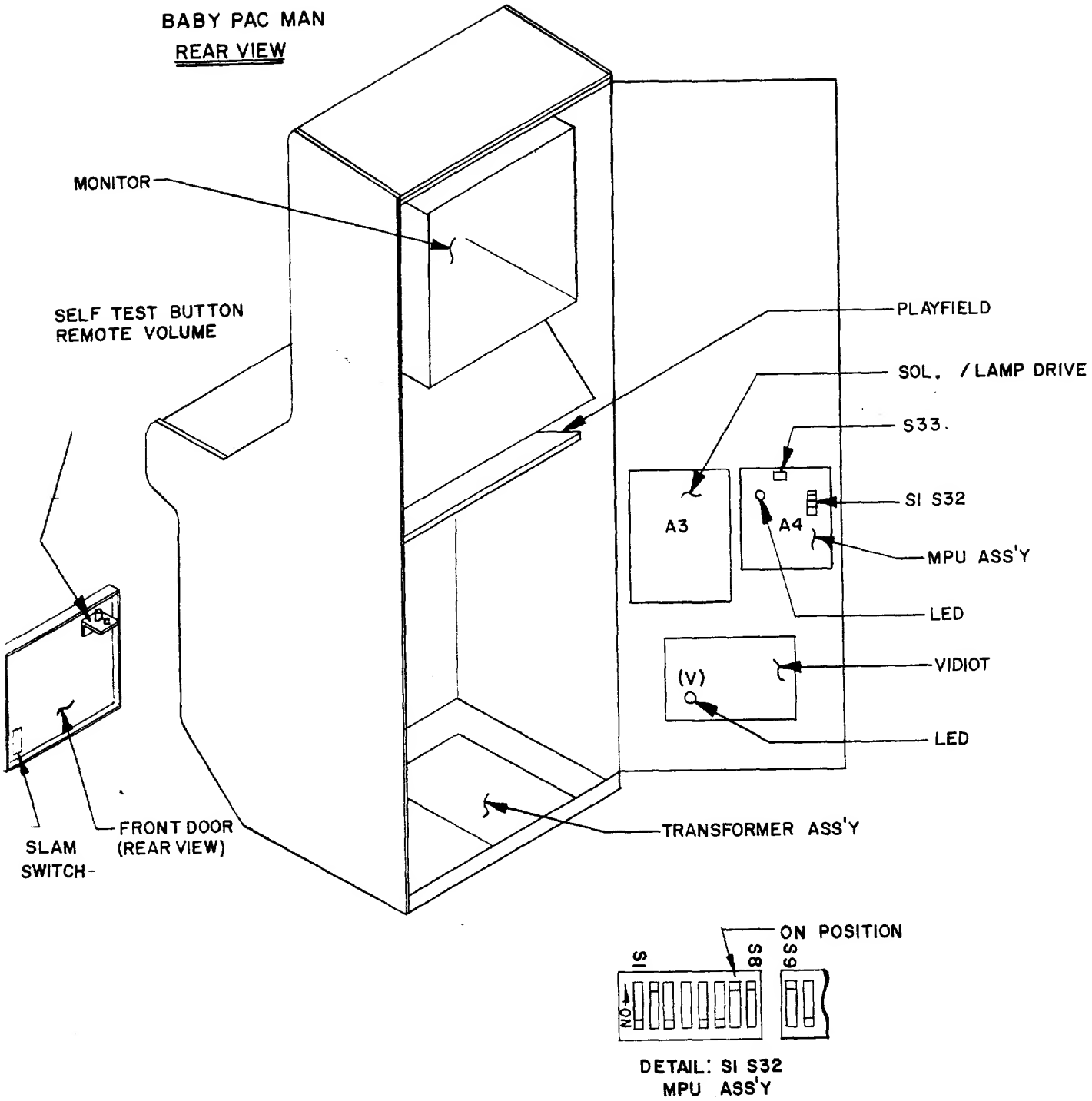
BABY PAC MAN
REAR VIEW
MONITOR
SELF TEST BUTTON
REMOTE VOLUME
PLAYFIELD
SOL. / LAMP DRIVE
S33.
SI S32
MPU ASS'Y
LED
VIDIOT
LED
A3
A4
(V)
TRANSFORMER ASS'Y
SLAM
SWITCH
FRONT DOOR
(REAR VIEW)
ON POSITION
S1
S8
S9
ON
DETAIL: SI S32
MPU ASS'Y

FIGURE III

VIII. ROUTINE MAINTENANCE ON LOCATION:

Self-Test routines are written into the game design. They are particularly useful for routine maintenance. The tests are described below. The first test is automatic and occurs on power-up. This test causes the MPU module A4 to examine itself for failures. Six flashes of an LED indicates proper operation. The second series of self-diagnostic tests causes the MPU to 'exercise' each of the other modules in such a way as to make their faults, if any, obvious. See Figure III and Page ii.

It is recommended that these tests be used several times a week to check out the games before play. If faults are discovered, they may be corrected on location if the operator has a stock of replacement modules. See "Troubleshooting on Location."

MPU Module Self-Test:

At power on, the LED on the MPU module flashes twice. (Flicker-Flash.) After a pause, it flashes four more times and goes out. A power-up tune is played to announce game readiness. This indicates proper MPU operating condition and successful completion of the power-up test.

Game Self-Diagnostic Tests:

1. Pressing the Self-Test button inside the door initiates the Self-Test routine. See Figures III and IV. COMMUNICATION TEST is then entered. A sequence of "01, 02, 04, 08, 10, 20, 40, 80" should be displayed in both columns. Invalid display indicates a problem with communications between video system and pinball system.

2. Pressing the Self-Test button again enters LAMPS TEST. All switched lamps flash on and off continuously.

3. Pressing the Self-Test button again causes each solenoid to be energized, one at a time, in a continuous sequence. Hold both flipper buttons 'in' during this test. The number appearing on the Player Score displays is the same as the number assigned to the solenoid. The sound of a solenoid pulling-in as a number appears indicates proper operation. The absence of sound is improper. If sound is absent, see Page 15 for help in Solenoid identification.

4. Pressing Self-Test button again causes the sound module to play same tune repeatedly.

5. Pressing the Self-Test button again causes the MPU to search each switch assembly for stuck contacts. If any are found, the number of the first set encountered is flashed on the Player Monitor. The number remains until the fault is cleared. See Page 15 for help in Stuck Switch identification. Other numbers may follow if more stuck contacts are present. If there are no stuck switches, the Monitor display flashes '0'.

6. Pressing the Self-Test button more times causes the MPU to step thru the high scores and bookkeeping functions described previously and finally to repeat the power-up test. For more rapid exit to power-up, turn the game off, then on. The game is now ready to play.

After successful completion of the Self-Diagnostic Test procedure, set the game up for play. Exercise each rollover, all switches, etc., by hand until each switch assembly on the playfield has been checked for proper operation. If actuating a switch assembly results in intermittent or no response, clean contacts by gently closing them on a clean business card or piece of paper and wiping until they wipe clean. Regap, if necessary to 1/16". **Do not burnish or file Gold Plated Switch Contacts.**

IX. TROUBLESHOOTING ON LOCATION

The game is designed to make troubleshooting easy. Several simple procedures are given herein that cover the greatest percentage of game failures. They are written for an operator on location

FIGURE IV. SELF-DIAGNOSTIC TEST MPU A4

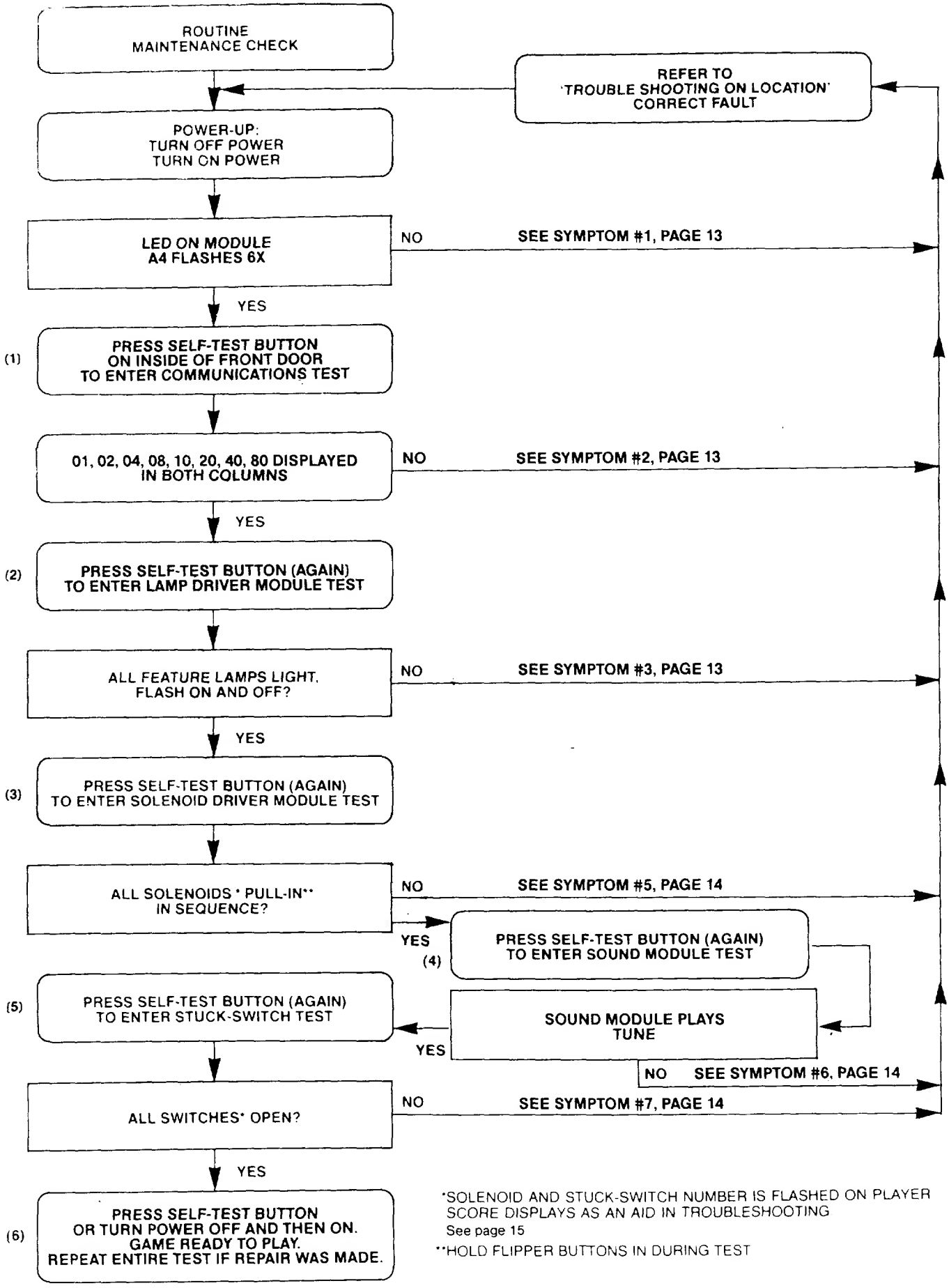

*SOLENOID AND STUCK-SWITCH NUMBER IS FLASHED ON PLAYER SCORE DISPLAYS AS AN AID IN TROUBLESHOOTING
See page 15

**HOLD FLIPPER BUTTONS IN DURING TEST

and require module replacement. (See Figure III.) Symptoms and the action to be taken are given for each type of problem.

If the problem is more complicated and is not solved by following this procedure, more detailed procedures are available from Bally. See the Parts List for ordering information.

1A) **SYMPTOM:** Game does not play power-up tune when power is turned on. General Illumination is present.

ACTION: **A)** Turn power OFF. Open back box. Locate light emitting diode (LED) on MPU module A4.

B) Turn Power ON. LED must flash 6X to indicate that module A4 is good. Correct flash sequence is flicker/flash-pause and then six more flashes and LED goes out.

C) If LED does not come on, or does not flash, or flashes, but less than 6X, turn off power. Replace MPU module A4.

CAUTION: **Replacement MPU Module must have same Part Number or incorrect operation will result! See Parts List for MPU Module Part Number.**

Turn power ON.

D) If game is correct, it is now ready for play. If game is not correct, refer to Module Replacement procedure. (See Parts List.)

2A) **SYMPTOM:** Correct data not displayed in either column.

ACTION: **A)** TURN POWER OFF. Open back box. Check status wiring to VIDIOT J1-3 & 4 to pin MPU J2-9 & 8. TURN POWER ON and reenter self-test.

2B) **SYMPTOM:** Correct data not displayed in one of the columns.

ACTION: **A)** TURN POWER OFF. Open back box. Check data connector of VIDIOT J1 and connectors J2 & J1 of pin MPU. TURN POWER ON and reenter self-test.

2C) **SYMPTOM:** Unable to get communications to display.

ACTION: **A)** Press SW1 on VIDIOT to force it into communications mode.

3A) **SYMPTOM:** Not all feature lamps light during game play.

ACTION: **A)** Check fuses under playfield.

B) With power ON, open front door. Press button (Self-Test switch) once. If the game is correct, **all** feature lamps flash ON and OFF.

C) Carefully raise playfield or open back box to gain access to lamps.

D) Replace bulbs that do not flash.

E) If game is correct, it is now ready for play.

F) If game is not correct, turn power OFF. Replace combo board A3. Turn power ON and repeat A.

G) If game is correct, it is now ready for play.*

H) If game is not correct, turn power OFF. Replace MPU module A4. See CAUTION, 1C. Turn power ON and repeat A.

I) If game is correct, it is now ready for play.* If game is not correct, refer to Module Replacement procedure. (See Parts List.)

3B) **SYMPTOM:** One or some switched lamps always ON.

ACTION: Repeat 2AA, AB, AE, and AF and, if necessary AG & AH.

*Turn power On-Off switch OFF and then ON.

4A) **SYMPTOM:** Solenoid(s) do(es) not pull-in during course of game.

ACTION: **A)** With power ON, open front door. Press button (Self-Test switch) three times.

B) If game was correct, each solenoid would be energized. A number is flashed on the Monitor as each solenoid is pulsed. Note any numbers that do not have the sound of a solenoid associated. See Solenoid Identification Table, Page 15 and Figure V.

C) Carefully lift the playfield to gain access to the solenoid. Turn power OFF. Inspect the solenoid.

D) If a lead is broken off, repair. Repeat A & B. If game is correct, it is now ready for play.* If solenoid wiring was correct, turn power OFF.

E) Replace combo board A3. See CAUTION NOTE 3AB.

F) Repeat AA & AB. If game is correct, it is now ready to play.* If game is not correct, turn power OFF.

G) Repeat AA and AB if game is correct. It is now ready for play. If game is not correct, turn power OFF.

H) Replace MPU module A4. See CAUTION NOTE 1C.

I) Repeat A & B. If game is correct, it is now ready for play.* If game is not correct, refer to Module Replacement Procedure. (See Parts List.)

4B) **SYMPTOM:** Solenoid(s) always energized—Note: if impulse solenoids (ball ejects, slingshots, thumper-bumpers, etc.) are energized continuously, they are subject to damage. Limit troubleshooting to one minute with power ON, followed by **five minutes with power OFF.** Repeat as necessary. Replace damaged solenoids.

ACTION: Do 4AA, AB, AE, AF, AG, AH and if necessary, AI and AJ.

5) **SYMPTOM:** Feature (Drop Targets, etc.) does not score.

ACTION: **A)** With power ON, open front door. Press button (Self-Test switch) to enter switch test.

B) If the game is correct, Monitor would flash '0'. If a number appears on the Player Score displays, see Switch Assembly Identification Table, Page 15 and Figure V.

C) Carefully lift the playfield. Locate the switch assembly identified from the number. Visually inspect the switch assembly. If the contacts are 'stuck,' regap them to 1/16". See section under ADJUSTMENTS. Repeat A & B. If the game is correct, it is now ready to play.* If game is not correct, turn the power OFF.

D) Replace MPU module A4. See CAUTION NOTE 1C.

E) Repeat A & B. If game is correct, it is now ready for play.* If the game is not correct, refer to Module Replacement Procedure. (See Parts List).

6) **SYMPTOM:** Game blows fuse(s) repeatedly.

ACTION: See Module Replacement Procedure. F.O. 560

*Turn power On-Off switch OFF and then ON.

GAME #1299 BABY PAC-MAN

SOLENOID IDENTIFICATION TABLE

Self Test #	SOLENOID IDENTIFICATION
01	OUTHOLE
02	5 DROP TARGET RESET
03	#1 DROP TARGET (LEFT SIDE)
04	
05	#3 DROP TARGET
06	
07	#5 DROP TARGET (RIGHT SIDE)
08	K1 RELAY (FLIPPER ENABLE)
09	LEFT MAZE SAUCER
10	RIGHT MAZE SAUCER

Switch Assembly Self-Test Display Numbers

Switch Self Test #	DESCRIPTION
01	*RIGHT FLIPPER E.O.S.
02	
03	START GAME FOR 2
04	
05	REBOUNDS (2)
06	START GAME FOR 1
07	RIGHT SPINNER
08	LEFT SPINNER
09	COIN II (RIGHT)
10	COIN I (LEFT)
11	
12	
13	
14	
15	TILT (2)
16	SLAM

Switch Self Test #	DESCRIPTION
17	TOP LOOP LANE (RIGHT)
18	
19	
20	TOP LOOP LANE (LEFT)
21	TUNNEL OUTLANE
22	FRUITS OUTLANE
23	RIGHT INSIDE OUTLANE
24	LEFT INSIDE OUTLANE
25	#5 DROP TARGET (RIGHT SIDE)
26	#4 DROP TARGET
27	#3 DROP TARGET (CENTER)
28	#2 DROP TARGET
29	#1 DROP TARGET (LEFT SIDE)
30	OUTHOLE SAUCER
31	RIGHT MAZE SAUCER
32	LEFT MAZE SAUCER

*PUSH IN RIGHT FLIPPER BY HAND

JOY STICK SWITCH TEST

PUSH STICK UP	SCREEN SHOWS UP
PUSH STICK DOWN	SCREEN SHOWS DOWN
PUSH STICK LEFT	SCREEN SHOWS LEFT
PUSH STICK RIGHT	SCREEN SHOWS RIGHT

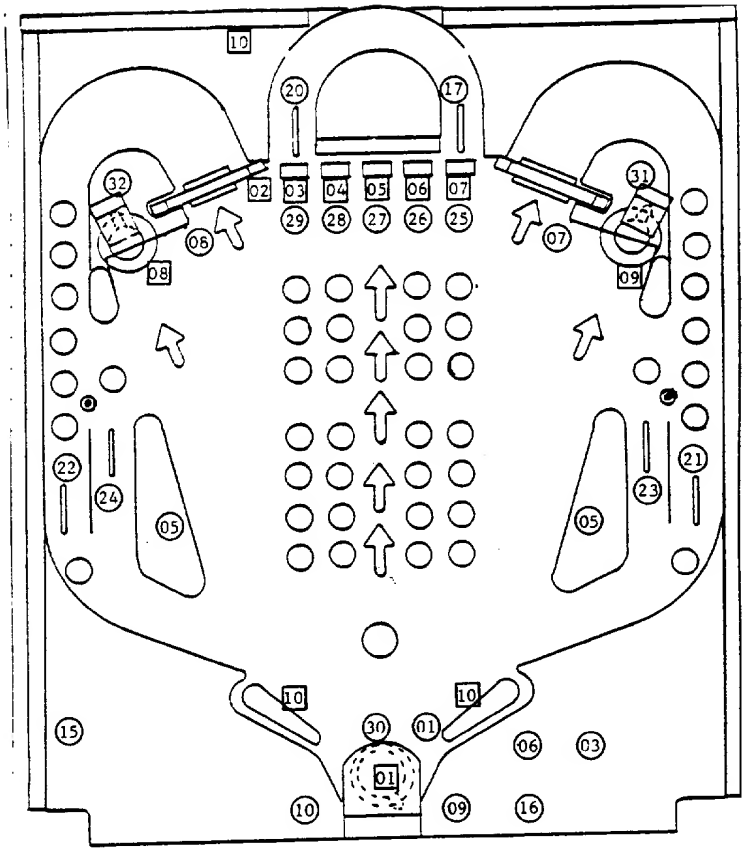

INDICATES SWITCH ASSEMBLY IDENTIFICATION NUMBERS
NOTE: CABINET: 15
DOOR: 09, 10, 16
TOP ARCH: 03, 06

INDICATES SOLENOID IDENTIFICATION NUMBERS
NOTE: BACK BOX 10

ASSEMBLY ADJUSTMENTS:

GENERAL:

All switch assemblies consist of leaf springs, contacts, separators, plastic tubing and screws to hold them to the mounting surface. Before attempting to adjust a switch assembly, make sure that these screws are tight. If not, tighten screw closest to the contact end of the leaf spring first. This will prevent the assembly from being secured in such a manner that the leaf springs tend to fan out. In general, all leaf springs are adjusted for a 1/16" gap in the open position and .010" overtravel or wipe in the closed position. All contacts should be in good condition. Unless otherwise instructed, they should be dry or non-lubricated. All contacts should be free of dust and dirt. Contacts, with the exception of the flipper button switch assemblies, are plated to resist corrosion. Filing or burnishing breaks the finish and encourages corrosion. Clean by closing the contacts over a clean piece of paper (e.g. a business

X. SERVICE PARTS:

A parts catalogue is available upon request. The catalogue is illustrated and lists all replacement parts for each game manufactured by Bally. Requests should be addressed to:

BALLY MANUFACTURING CORPORATION
2640 WEST BELMONT AVENUE
CHICAGO, ILLINOIS 60618
ATTN: PARTS DEPARTMENT

SERVICE HINTS:

The Bally playfield has an improved tuff-coat finish with excellent wearing properties. Its life expectance, as well as play appeal, can be extended by periodic cleaning of the playfield.

DO: Bally recommends you clean your playfield with Wildcat #125 (Wildcat Chemical Co., 1333 W. Seminary Drive, Ft. Worth, Texas 76115). Wildcat #125 is a combination cleaner and polish. Bally has tried and tested this product and found it to be very effective. If Wildcat #125 is not available, Bally suggests you ask your Distributor to order it. Inspect and hand polish the ball in a clean cloth. A chipped ball must be replaced. It can ruin the finish on the playfield in a short period of time.

DON'T: Use water in large quantities, highly caustic cleaners, abrasive cleaners or cleaning pads on the playfield. Do not allow a wax or polish build up. Waxes yellow with age and spoil play appeal.

XI. PARTS LIST

BABY PAC-MAN #1299

MISCELLANEOUS	PART NUMBER
Transformer (Domestic or Export)	AS-3071-12
Bulbs, #555	E-125-73
Fuse, 1 Amp. 3 AG Slow Blow (Playfield Solenoid Protection)	E-133-44
Fuse, 10 Amp (2) (Playfield Lite Protection)	E-133-10
ASSEMBLY COILS	
Flipper (2)	AQ-25-500/ 34-4500
Left Saucer	AO-27-1300
Right Saucer	AO-27-1300
Outhole Kicker	AO-27-1300
Drop Target Reset	NO-26-1900
Individual Drop Target (3)	CJ-31-2000
PLAYFIELD PARTS	See Figure II
MODULES	
MPU A4	AS-3241-1
Transformer & Rectifier A2	AS-2877-11
Rectifier Board (Part of A2)	AS-2518-132
REPAIRS PROCEDURES/AIDS	
Module & Component Replacement	F.O. 560-1
AID (Assistance in Diagnostics) Kit, used with F.O. 560-1	KIT #485-1
MODULE COMPONENTS	
SEE MODULE PARTS LIST	

AS-2518-133 MPU MODULE

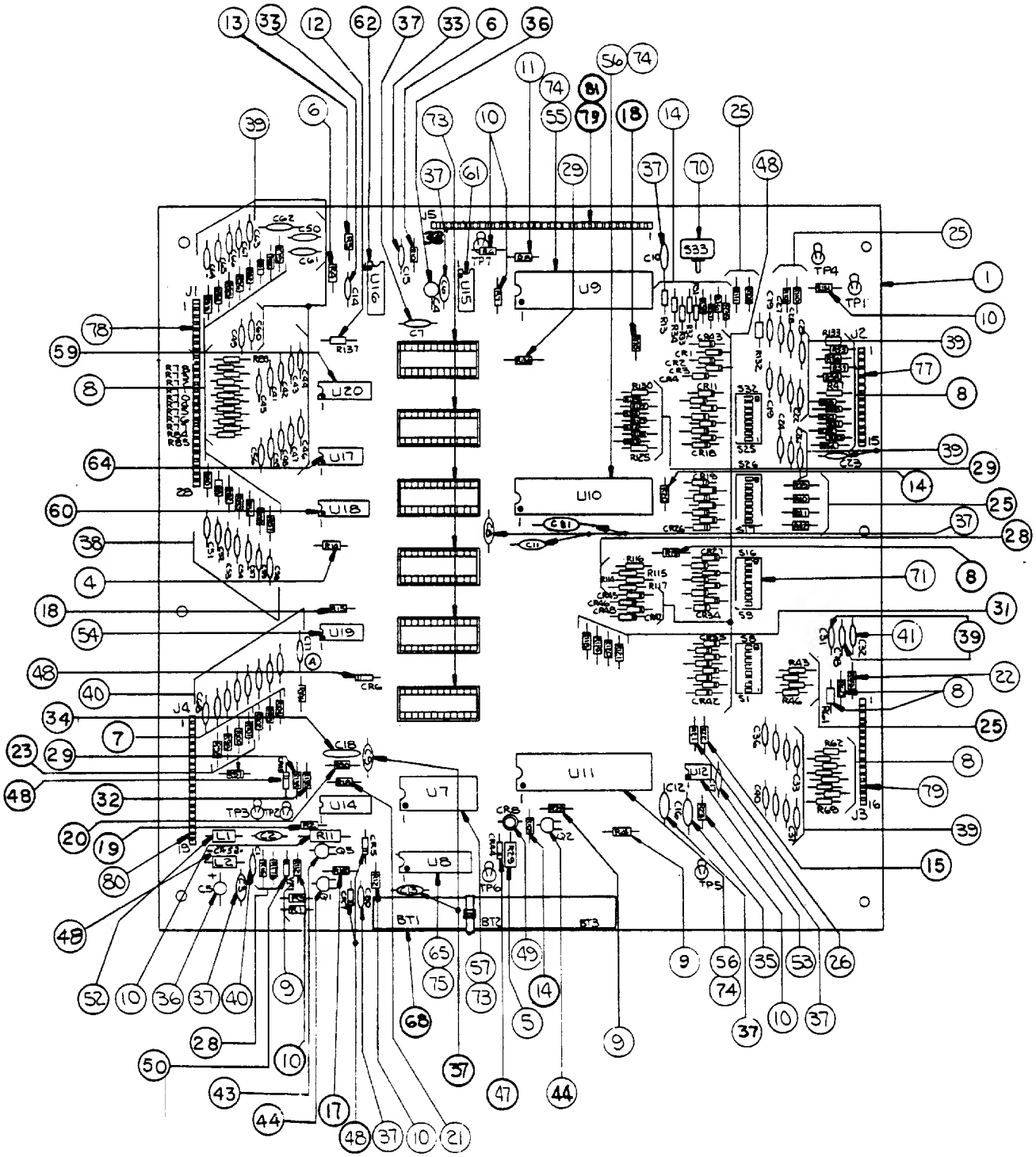

A4: MPU MODULE

COMPONENT PARTS LIST

ITEM	REFERENCE DESIGNATION	BALLY PART #	DESCRIPTION
1	A4 (see note 1)	AS-3241-1	MPU Module Complete.
2	A4 (see note 2)	AS-2518-133	MPU Module less Program Memory, U1-6 incl.
3-32	See Schematic		Resistors, See schematic for value
33	C14, C15	E-00586-0067	Capacitor, 470 PFD, 1kv
34	C18	E-00586-0088	Capacitor, .05 MFD, 16V
35	C16	E-00586-0081	Capacitor, .1 MFD, 100V
36	C4, C5	E-00586-0073	Capacitor, 4.5 MFD, 25V
37	C3, C6-C13, C17, C81	E-00586-0085	Capacitor, .01 MFD, 25V
38	C79, C41-C67	E-00586-0083	Capacitor, 470 PFD, 50V
39	C19-C31, C78, C33-C40	E-00586-0082	Capacitor, 390 PFD, 50V
40	C1, C2, C68-C77	E-00586-0084	Capacitor, 820 PFD, 50V
41	C32	E-00586-0077	Capacitor, 3000 PF, 1 kv
43	Q5	E-00585-0023	Transistor PNP (MPS-3702)
44	Q1, Q2	E-00585-0031	Transistor (2N3904)
47	CR44	E-00587-0006	Diode (IN4004)
48	CR1-CR7, CR11-CR43, CR45-CR49, CR52	E-00587-0014	Diode (IN4148)
49	CR8	E-00679	LED (Green)
50	VR1	E-00598-0008	Diode Zener (8.2V, IN9598)
52	L1, L2	E-00604-0003	Inductor, 22 Micro Hy.
53	U12	E-00620-0004	Timer (555)
54	U19	E-00620-0005	Quad 2 Input (4011)
55	U9	E-00620-0028	MPU I.C. (6800)
56	U10, U11	E-00620-0029	PIA I.C. (6820)
57	U7	E-00620-0030	RAM I.C. (6810)
59	U20	E-00620-0032	HEX Buffer I.C. (14502B)
60	U14, U18	E-00620-0033	HEX Inverter (4049B)
61	U15	E-00620-0034	Quad Memory Drive (MC3459L)
62	U16	E-00620-0035	Dual Monostable (9602)
64	U17	E-00620-0041	Quad 2 Inputs (74L00N)
65	U8	E-00620-0042	RAM (C MOS, P5101L-3)
68	BT1, BT2, BT3	E-00628-0003	Battery
70	S33	E-00658-0001	Push Button Switch
71	S1-S8, S9-S16, S17-S24, S25-S32	E-00677	DIP Switch
73		E-00712	24 Pin Socket
74		E-00712-0001	40 Pin Socket
75		E-00712-0003	22 Pin Socket
77	J2	E-00715	15 Pin Wafer Connector
78	J1	E-00715-0004	28 Pin Wafer Connector
79	J3, J5	E-00715-0017	16 Pin Wafer Connector
80	J4	E-00715-0018	19 Pin Wafer Connector
81	J5	E-00715-0024	17 Pin Wafer Connector

NOTE: Order replacement memory chips U1-U6, specifying game, socket and part number stamped on chip.

AS-2518-132 RECTIFIER BOARD ASSEMBLY

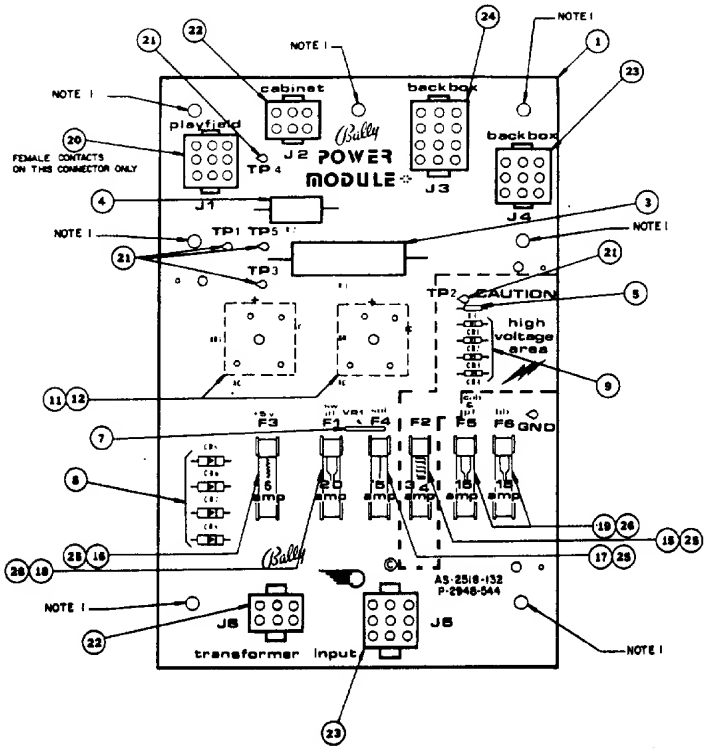

(Part of) A2: POWER TRANSFORMER MODULE
COMPONENT PARTS LIST

ITEM	REFERENCE DESIGNATION	BALLY PART #	DESCRIPTION
0	A2	AS-2877-11	Power Transformer Module, Complete
1	P/O AS	AS-2518-132	Rectifier Board Assembly, Complete
3	R1	E-00104-092	Resistor, 10%, 600 Ohm, 10W
4	R2	E-00104-0091	Resistor, 25 Ohm, 5W
5	R3	E-00105-0226	Resistor, 5%, 100K Ohm, ¼W
7	VR1	E-00623	Varistor
8	CR5, CR6, CR7, CR8	E-00587-32	6A Diode
9	CR1, CR2, CR3, CR4	E-00587-0015	Diode (IN4004)
10			
11	Used with BR1-2	P-1973-480	Spacer
12	BR1, BR2	E-00602-0007	Bridge Rectifier
15	F2	E-00133-0028	Fuse, ¾A, 250V, 3AG
16	F3	E-00133-0006	Fuse, 6A, 32V, 3AG
17	F4	E-00133-0005	Fuse, 5A, 32V, 3AG
18	F1	E-00133-0027	Fuse, 20A, 32V, 3AG
19	F5, F6	E-00133-0015	Fuse, 15A, 32V, 3AG
20	J1	E-806-9	9 CKT Socket Header
21	TP1, 2, 3, 4, 5	P-05399	Test Clip
22	J2, J6	E-805-6	6 CKT Pin Header
23	J4, J5	E-805-9	9 CKT Pin Header
24	J3	E-805-12	12 CKT Pin Header
25	F2, 3, 4	E-00148-0021	Fuse Clips
26	F1, 5, 6	E-00148-0022	Fuse Clips (Low Resistance)

AS-2518-121 VIDIOT ASSEMBLY

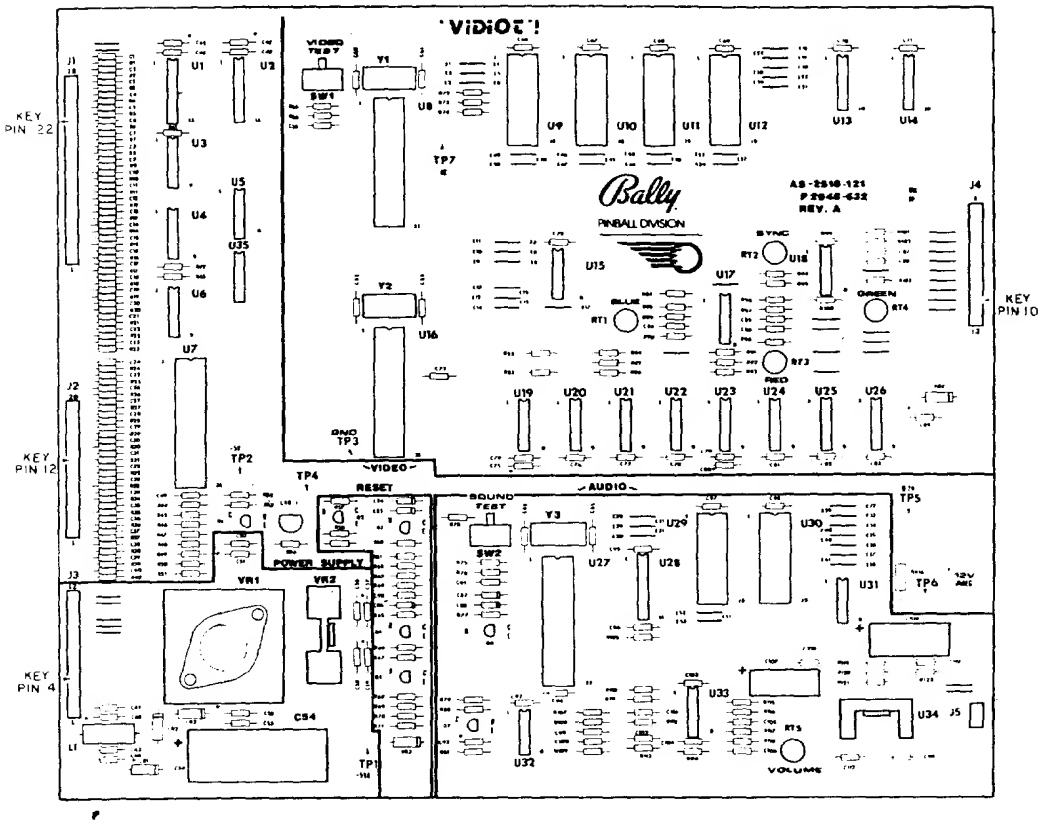

COMPONENT PARTS LIST

DESCRIPTION	DESIGNATION	QTY.	PART NO.
Resistor, 470ohm, ¼w, 5%	R1-8, 20-23	12	E-105-253
Resistor, 10K, ¼w, 5%	R9-19, 60, 62, 78	13	E-105-185
Resistor, 2K, ¼w, 5%	R52, 78	2	E-105-237
Resistor, 1.2K, ¼w, 5%	R24-31	8	E-105-222
Resistor, 110ohm, ¼w, 5%	R32-40	9	E-105-371
Resistor, 100K, ¼w, 5%	R41-43, 107, 109, 112	6	E-105-331
Resistor, 56K, ¼w, 5%	R44-51	8	E-105-258
Resistor, 3.3K	R55, 56, 72-76	7	E-105-238
Resistor, 560ohm, ¼w, 5%	R54	1	E-105-342
Resistor, 220ohm	R57, 121	2	E-105-303
Resistor, 5.6K, ¼w, 5%	R58	1	E-105-215
Resistor, 62K, ¼w, 5%	R59	1	E-105-419
Resistor, 82K, ¼w, 5%	R61	1	E-105-341
Resistor, 47K, ¼w, 5%	R63, 108, 53	2	E-105-263
Resistor, 82ohm, ¼w, 5%	R64	1	E-105-430
Resistor, 100ohm, ¼w, 5%	R65, 89, 97, 102	4	E-105-301
Resistor, 7.5K, ¼w, 5%	R66, 86	2	E-105-345
Resistor, 9.1K, ¼w, 5%	R67	1	E-105-228
Resistor, 2.7K, ¼w, 5%	R68, 70, 81, 94	4	E-105-151
Resistor, 33K, ¼w, 5%	R69	1	E-105-282

DESCRIPTION	DESIGNATION	QTY.	PART NO.
Resistor, 1K, ¼w, 5%	R71	1	E-105-230
Resistor, 16K, ¼w, 5%	R77	1	E-105-420
Resistor, 180ohm, ¼w, 5%	R79	1	E-105-235
Resistor, 68ohm, ¼w, 5%	R80	1	E-105-213
Resistor, 620ohm, ¼w, 5%	R82	1	E-105-386
Resistor, 1.5K, ¼w, 5%	R84, 85, 91, 93, 95, 100	6	E-105-229
Resistor, 560ohm, ¼w, 5%	R83	1	E-105-244
Resistor, 15K, ¼w, 5%	R87, 99	2	E-105-336
Resistor, 12K, ¼w, 5%	R103	1	E-105-364
Resistor, 3.9K, ¼w, 5%	R88, 96, 101	2	E-105-257
Resistor, 2.2K, ¼w, 5%	R90, 98	2	E-105-287
Resistor, 3K, ¼w, 5%	R92	1	E-105-333
Resistor, 120ohm, ¼w, 5%	R105	1	E-105-212
Resistor, 62ohm, 1w, 5%	R106	1	E-105-421
Resistor, 120K, ¼w, 5%	R110	1	E-105-247
Resistor, 130K, ¼w, 5%	R111	1	E-105-203
Resistor, 200K, ¼w, 5%	R113	1	E-105-225
Resistor, 390K, ¼w, 5%	R114, R118	2	E-105-310
Resistor, 470K, ¼w, 5%	R115	1	E-105-284
Resistor, 24K, ¼w, 5%	R116	1	E-105-268
Resistor, 180K, ¼w, 5%	R117	1	E-105-252

COMPONENT PARTS LIST

DESCRIPTION	DESIGNATION	QTY.	PART NO.
Resistor, 430ohm, ¼w, 5%	R119	1	E-105-383
Resistor, 2.2ohm, ¼w, 5%	R120	1	E-105-291
Resistor, 1ohm, ¼w, 5%	R122	1	E-105-196
Potentiometer, 2.5K, 1 turn	RT1, RT3	2	E-599-32
Potentiometer, 10K, 1 turn	RT2, RT4	2	E-599-15
Potentiometer, 1K, 1 turn	RT5	1	E-599-16
Capacitor, 820PF, Ceramic	C1-C8, C20-23	12	E-586-84
Capacitor, 100PF, Ceramic	C9-C19, C105	12	E-586-221
Capacitor, 470PF, Ceramic	C24-C31	8	E-586-83
Capacitor, 390PF, Ceramic	C32-C40	9	E-586-82
Capacitor, .01MF, Ceramic	C41, 43, 46, 48, 49, 50, 53, 55, 56, 58, 66-74, 76-78, 80-83, 86, 88, 91, 93-95, 97, 98, 103	35	E-586-85
Capacitor, 4.7MF, TANT.	C42, 44, 45, 47, 51, 52, 57, 59, 75, 79, 89	11	E-586-73
Capacitor, 4700MF, Elec.	C54	1	E-586-123
Capacitor, 27PF, Ceramic	C60, C61, C64, C65	4	E-586-157
Capacitor, 33PF, Ceramic	C62, 63	2	E-586-151
Capacitor, 10PF, Ceramic	C84, C85, C87	3	E-586-150
Capacitor, 6.8MF, TANT.	C90	1	E-586-179
Capacitor, 47MF, Lythic	C92	1	E-586-148
Capacitor, 47PF, Ceramic	C96	1	E-586-170
Capacitor, 3000PF, Ceramic	C99	1	E-586-182
Capacitor, .1MF, Ceramic	C100, 104, 110, 111	4	E-586-159
Capacitor, 150FF, Ceramic	C101	1	E-586-158
Capacitor, 220PF, Ceramic	C102	1	E-586-180
Capacitor, 300PF, Ceramic	C106	1	E-586-181
Capacitor, 470MF, Elec.	C107	1	E-586-124
Capacitor, .05MF, Ceramic	C108	1	E-586-88
Capacitor, 1000MF, Elec.	C109	1	E-586-136
Capacitor, .33MF, Ceramic	C112	1	E-586-134
Crystal, 3.58 MHZ	Y1, Y3	2	E-744-5
Crystal, 10.738 MHZ	Y2	1	E-744-12
I.C., 74LS374	U1, U2	2	E-620-194
I.C., 4050	U3, U4	2	E-620-7
I.C., 74LS02	U5	1	E-620-59
I.C., 74LS3684	U6	1	E-620-260
I.C., MC6821	U7	1	E-620-29
I.C., MC6809	U8	1	E-620-261
Selected Per Model	U9, U10, U11, U12	4	
I.C., MCM2114	U13, U14	2	E-620-198
I.C., 74LS155	U15	1	E-620-168
I.C., TMS 9928ANL	U16	1	E-620-262
I.C., LM359	U17, U18	2	E-620-263

DESCRIPTION	DESIGNATION	QTY.	PART NO.
I.C., MCM 4517-15 (8118-12)	U19-U26	8	E-620-264
I.C., MC6803	U27	1	E-620-265
I.C., 74LS373	U28	1	E-620-183
Selected Per Model	U29, U30	2	
I.C., 74LS10	U31	1	E-620-267
I.C., ZN429E-8 DAC	U32	1	E-620-266
I.C., LM3900	U33	1	E-620-126
I.C., TDA2002	U34	1	E-620-127
Reg., LM323	VR1	1	E-710
Reg., MC7805	VR2	1	E-620-140
ZENER, IN958B	VR3	2	E-587-31
DIODE, VR332	CR1-CR3	3	E-587-24
DIODE, IN4606	CR4-CR6	3	E-587-29
DIODE, IN4004	CR7, CR8	2	E-587-15
TRANSISTOR, 2N3904	Q3, Q5	2	E-585-31
TRANSISTOR, 2N4403	Q2, Q4, Q6	3	E-585-23
TRANSISTOR, 2N5305	Q7, Q1	1	E-585-12
INDUCTOR, 3 amp, 10 μh	L1	1	E-604-21
Switch, PCB	SW1, SW2	2	E-658-1
Test Loop	TP1-TP7	7	P-5399
Jumpers Per Model	E1, etc.	—	M-1777-126
Jumpers	—	29	M-1777-126
Socket, 40 PIN	U7, U8, U16, U27	4	E-712-1
Socket, 28 PIN	U9-12, U29, U30	6	E-712-28
Socket, 18 PIN	U13, U14	2	E-712-18
Socket, 16 PIN	U19-U26	8	E-712-16
LED, NC5254	LED 1	1	E-679
Heat Sink 6054B	Used with VR1	1	E-682-20
Thermal Washer	Used with VR1	1	E-889-1
Heat Sink	Used with VR2	1	E-682-14
Heat Sink 6030B	Used with U34	1	E-682-8
Thermal Washer	Used with VR2, U34	2	E-889-3
I.C., 74LS00	U35	1	E-620-148
Screw	Used with VR1, VR2, U34	4	LSPR-632-1106
Nut	Used with VR1, VR2, U34	4	N-632-2112
Connector, KK-100	J1	1	E-766-28
Connector, KK-100	J2	1	E-766-20
Connector, KK-156	J3, J4	2	E-736-12
Connector, KK-156	J5	1	E-736-2
PCB, Vidiot	M-645-689	1	P-2948-532
IN5344	VR4	1	E-587-33

AS-2518-107 LAMP/SOLENOID DRIVER COMBINATION BOARD

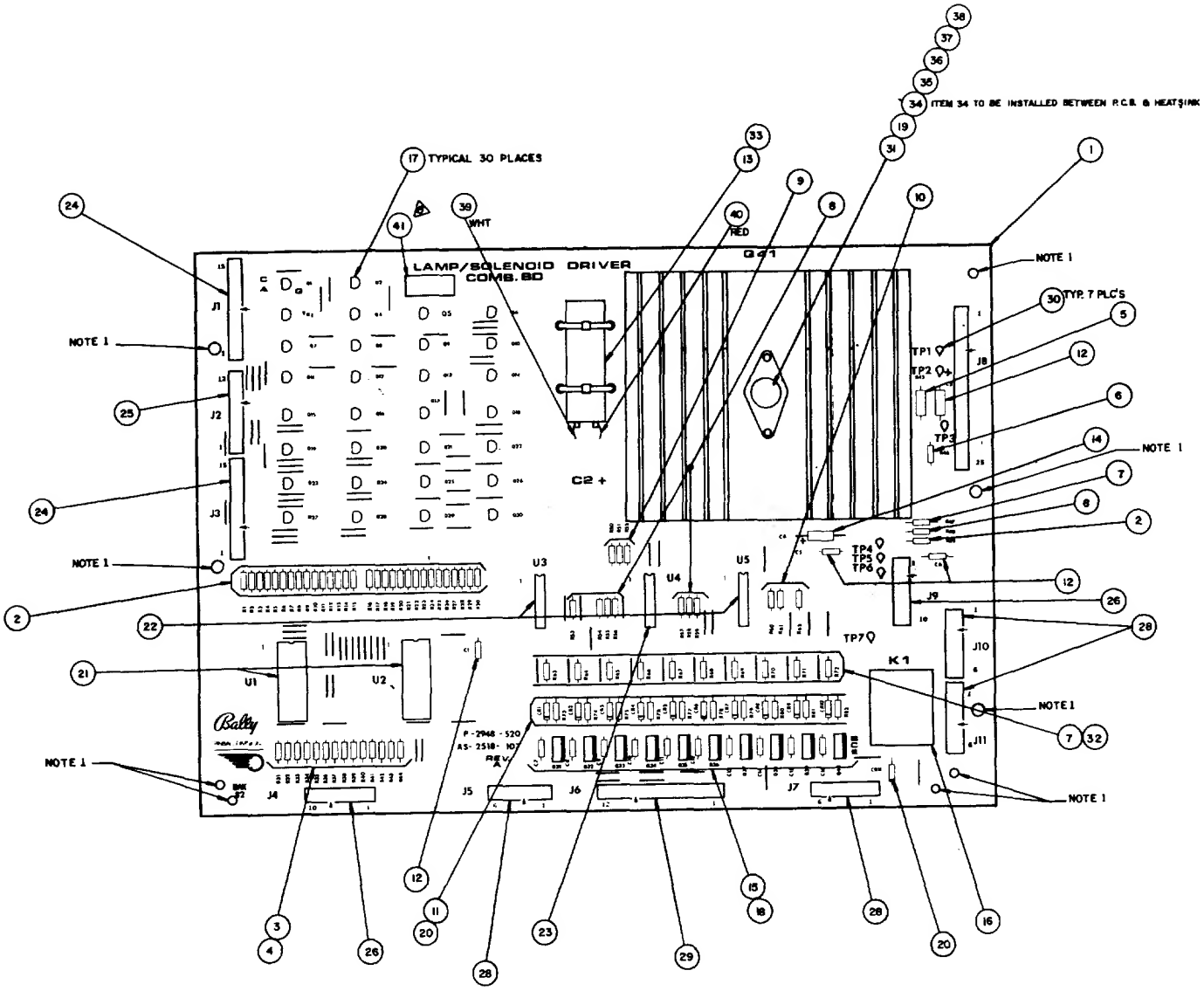

BILL OF MATERIAL

ITEM	QUANTITY	DESIGNATION	DESCRIPTION	BALLY PART NO.
1	1		P.C.B. (M-645-673)	P-2948-520
2	31	R1-R30, R49	RESISTOR, 2K, 1/4W, 5%	E-105-237
3	7	R31, 33, 35, 37, 39, 41, 43	RESISTOR, 2.2M, 1/4W, 5%	E-105-256
4	7	R32, 34, 36, 38, 40, 42, 44	RESISTOR, 20K, 1/4W, 5%	E-105-242
5	1	R45	RESISTOR, 100 OHM, 1/2W, 5%	E-105-265
6	1	R46	RESISTOR, 2.2 OHM, 1/4W, 5%	E-105-291
7	11	R47, R63-R72	RESISTOR 120 OHM, 1/4W, 5%	E-105-212
8	8	R48, R53-R59	RESISTOR, 1.2K, 1/4W, 5%	E-105-222
9	3	R50-R52	RESISTOR, 33K, 1/4W, 5%	E-105-282
10	3	R60-R62	RESISTOR, 3.9K, 1/4W, 5%	E-105-257
11	10	R72-R82	RESISTOR, 330 OHM, 1/4W, 5%	E-105-219
12	4	C1, C3, C5, C6	CAPACITOR, 0.1μF, CERAMIC, 20V	E-586-014
13	1	C2	CAPACITOR, 11,000 μF, 20V, ELEC.	E-586-062
14	1	C4	CAPACITOR, 2μF, 25V, ELEC.	E-586-063
15	10	C7-C16	CAPACITOR, .002μF, IKV, CERAMIC	E-586-064

ITEM	QUANTITY	DESIGNATION	DESCRIPTION	BALLY PART NO.
16	1	K1	RELAY	E-146-795
17	30	Q1-Q30	TRANSISTOR, SCR 2N5060	E-585-014
18	10	Q31-Q40	TRANSISTOR, SE9302	E-585-034
19	1	Q41	TRANSISTOR, + 5V REG.	E-710
20	11	CR1-CR11	DIODE, IN 4004	E-587-015
21	2	U1, U2	IC, DECODE, 14514B	E-620-37
22	2	U3, U5	IC, NPN TRANSISTOR ARRAYS CA 3081	E-681
23	1	U4	IC, 1 OF 8 DECODER, 74LS138	E-620-181
24	2	J1, J3	CONNECTOR, WAFER, 15 PIN, KK100	E-766-15
25	1	J2	CONNECTOR, WAFER, 12 PIN, KK100	E-766-12
26	2	J4, J9	CONNECTOR, WAFER, 10 PIN, KK100	E-766-10
27	1	J8	CONNECTOR, WAFER, 25 PIN, KK100	E-766-25
28	4	J5, J7, J10, J11	CONNECTOR, WAFER, 6 PIN, KK156	E-736-6
29	1	J6	CONNECTOR, WAFER, 12 PIN, KK156	E-736-12
30	7	TP1-TP7	TEST CLIP	P-05399
31	1		HEAT SINK, TO-3 CASE	E-682-002
32	110		JUMPERS	M-1777-126
33	2		TYWRAP	E-647-5
34	2	USED WITH ITEM 31, 19	PLAIN WASHER	PW-00006-0012
35	1	USED WITH ITEM 31, 19	THERM. WASHER	M-1777-0132
36	2	USED WITH ITEM 31, 19	SCREW, 6x32	LSPR-00632-1112
37	4	USED WITH ITEM 31, 19	LOCKWASHER INT TOOTH	M-01701-0006
38	2	USED WITH ITEM 31, 19	NUT, 6x32	N-00632-2112
39	1	USED WITH C2	WIRE, JUMPER, WHITE	M-1777-156
40	1	USED WITH C2	WIRE, JUMPER, RED	M-1777-157
41	1	J12	CONNECTOR, MATE & LOCK, 3 PIN HEADER	E-805-3

A2: POWER TRANSFORMER MODULE

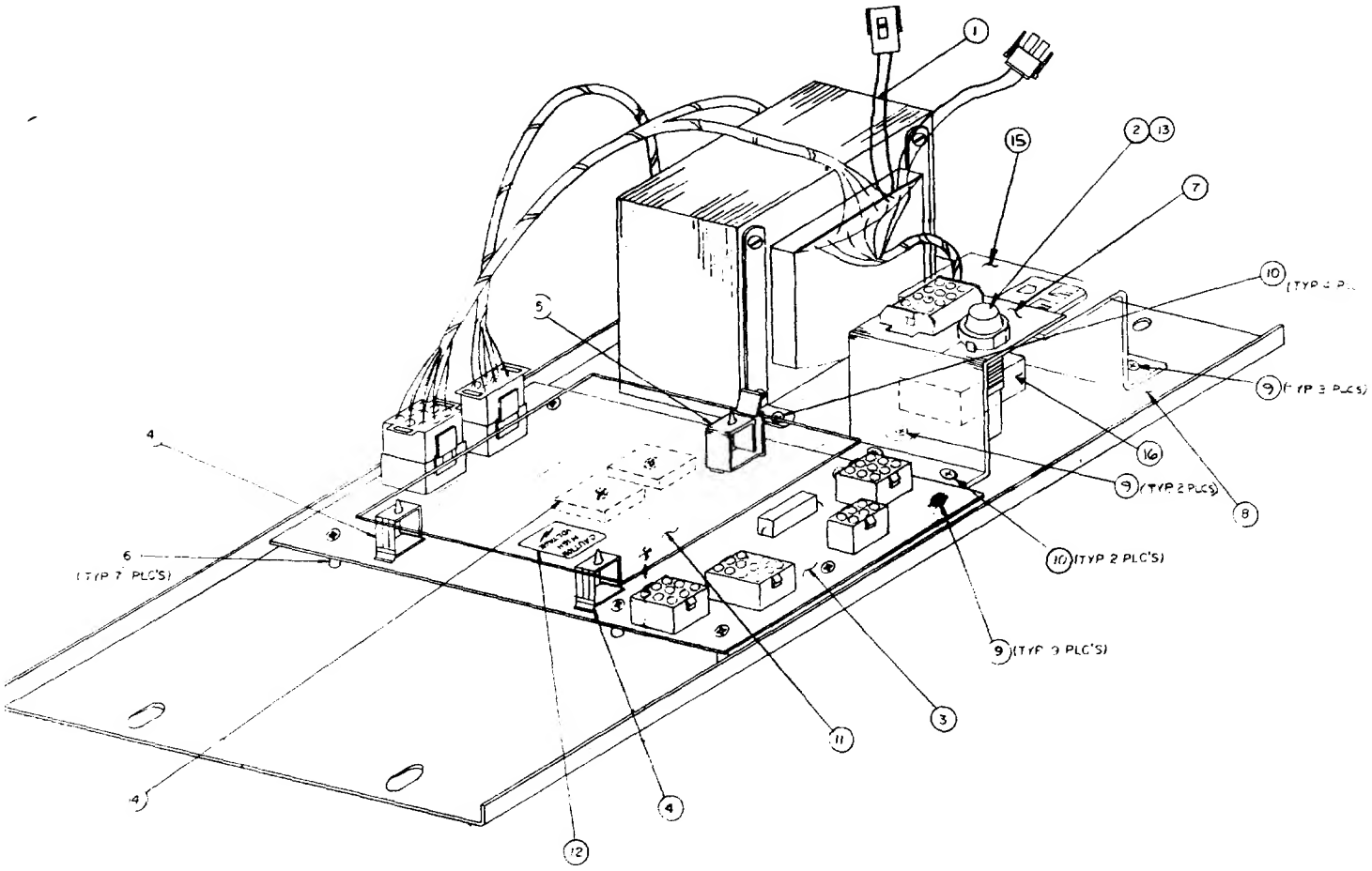

COMPONENT PARTS LIST

ITEM	REFERENCE DESIGNATION	BALLY PART #	DESCRIPTION
0	A2	AS-2877-11	Power Transformer Module, Complete
1		AS-3071-12	Transformer
2		E-148-25	Fuse Holder
3	A2	AS-2518-132	Power Module Assy.
4		M-1829-4	Hinged Support
5		M-1829-3	Edge Holder
6		M-1829-5	Spacer
7		P-6442-244b	Fuse & Connect Brkt.
8		P-6442-246	Chassis
9		RLPP-832-1812	Screw
10		RLPP-1032-1806	Screw
11		P-2692-2	Shield
12		M-469-963a	High Voltage Sticker
13		E-133-24	3A S.B. Fuse
14		E-889-4	Sil Pad

VIDIOT MODULE AS-2518-121
THEORY OF OPERATION

I. VIDIOT SELF-TEST

The Vidiot module has, as part of integrated circuits U12 and U29, programs designed to test the two parts of the module each time power is applied. No action is required on the operator's part to initiate the test. The programs cause each MPU chip to test itself, the program ROMs, the scratch pad RAMS, the I/O chips, the Video Display Processor (VDP) and the video RAM (VRAM). If the uP finds all circuits in proper operating order it initializes the Vidiot module and makes it ready for game play. If the uP finds a fault during the course of Self-Test, it stops at that point in the test and does not allow game play.

The accuracy of the Vidiot Self-Test is about 90%. All faults except D/A converter, low-pass filter, power amplifier and communications interface problems are detected.

The interesting idea behind the Vidiot Self-Test is that not only does it prevent operation when faults are detected, but like the MPU module it helps to localize these faults. The LED indicator on the Vidiot flashes once for each successfully completed test. Counting the number of flashes of the LED, after power-up, localizes the fault to the offending circuit of the module.

Both the Sound uP and Video uP on the Vidiot use the same LED for Self-Test. The Sound uP goes first while the Video uP waits for about 30 seconds. If the LED comes on after RESET and stays on both the Sound and Video sections of the Vidiot are not functioning. If the LED stays on or off for about 3 seconds then starts flashing the Sound section has a problem. If the LED flashes then stays on or off after about 3 seconds the Video section of the Vidiot has a problem.

A) 1st Flash

After RESET the Sound uP (U27) attempts to test the sound ROM (U29). It does a vertical sum of the ROM contents and checks this for an all ones result. If the computed checksum is not all ones, U29 is defective and the uP will not allow sounds to be made. If the checksum is 11111111 the uP flashes the LED and proceeds to the next test.

B) 2nd Flash

Next the Sound uP (U27) tests itself and its on-chip RAM. It attempts to write then read back all 256 patterns (00000000 to 11111111) in each of the 128 on-chip RAM locations. If at any point in this test the uP fails to correctly read back a pattern that it has written, U27 is deemed defective and the uP will not allow sounds to be made. If the uP completes the test successfully it flashes the LED and awaits sound instructions from the Video section.

C) 3rd Flash

After a pause the video uP (U8) attempts to test the program ROM U12. It performs a vertical sum of the ROM contents and checks this for an all ones result. If the computer checksum is not all ones, U12 is defective and the uP will not allow game play. If the checksum is 11111111 the uP flashes the LED and proceeds to the next test.

D) 4th Flash

Next the video uP attempts to test ROM U11 in the same way. If the checksum is incorrect U11 is defective and the uP will not allow game play. If the checksum is correct the uP flashes the LED and proceeds to the next test.

E) 5th Flash

This test is the same as the 4th flash but is performed on U10. A good ROM in U10 is indicated with a LED flash and the next test is started. A bad part in U10 will not allow game play.

F) 6th Flash

This test is the same as the 5th flash but is performed on U9. A good ROM in U9 is indicated with a LED flash and the next test is started. A bad part in U9 will not allow game play.

G) 7th Flash

Now the Video uP (U8) tests the scratch RAMs U13 and U14. It attempts to write then read back an incrementing pattern that is not address aligned to all 1024 locations. It then attempts to write and read back a decrementing non-aligned pattern. If at any point in this test the uP fails to correctly verify the pattern it has written U13 and U14 are deemed bad and the uP will not allow the Vidiot to come up. If the uP completes the test successfully it flashes the LED and proceeds to the next test.

H) 8th Flash

The Video uP now tests the PIA chip U7. It tests each of the two full byte port initialization registers with a 256 pattern test (00000000 to 11111111). It tests each of the two full byte I/O registers, PA0-PA7 and PB0-PB7 with a 256 pattern test. It then tests the CA2 and CB2 ports. These are initialized as outputs then written into to see if they will store a '1' and a '0'. When both ports are found good, the uP flashes the LED and proceeds to the next test.

I) 9th Flash

The next test attempts to verify that the VDP is operating. The uP attempts to initialize the VDP registers for operation then monitors the 'End of Frame' flag bit in one of the registers. After the first occurrence the uP resets the bit and times its re-occurrence. The VDP should set this bit at the end of each video scan frame, about 60 Hertz. If this rate is not detected the uP finds the VDP defective and won't allow the video to come up. If the rate is within tolerance the uP flashes the LED and proceeds to the next test.

J) 10th Flash

The last test attempts to verify that the VRAM is operational. The uP tells the VDP the RAM type and size and allows it to start the dynamic RAM refresh operation. It then attempts to store and verify an incrementing pattern that is not address aligned in all 16384 locations. If this succeeds the test is repeated with a decrementing pattern. When all tests are completed the uP flashes the LED and proceeds to initialize the Vidiot for game play.

K) Vidiot Initialization

The Video uP initializes the PIA for MPU-Vidiot communications, Video Joystick switch reading and Sound uP communications. It clears the scratch RAM and sets up the initial Video variables. It configures the VDP and its VRAM parameter tables then awaits game play instructions from the MPU. No screen is displayed unless instructions are received from the MPU.

II. NORMAL OPERATION

The Vidiot serves three functions. First it is a display device for the MPU. Second it is a sound system for the MPU. And lastly it is a video game board. The Vidiot and MPU work together to provide an integrated Video game with a Pinball feature. Their combined operation requires coordinated inter-uP communication. This communication is provided by the interface on the Vidiot module. Interface Data and Status is returned to the MPU on its switch return lines. The MPU controls this information flow by selectively enabling the Video Output or Status Data drivers synchronously with its switch reading. To send a byte of information to the MPU the video uP latches the data into U1 and sets a status bit indicating data is available. When the MPU polls the Vidiot Status Data it detects the data available and subsequently reads the data by enabling the U1 output drivers. The process of reading the data generates an interrupt to the video uP which causes it to clear the data available status bit. To send a byte of information to the Vidiot the MPU latches the data into U2. The process of latching the data generates an interrupt to the video uP which causes it to set a status bit indicating the port is unavailable for writing. After the video uP reads the data byte it clears the status bit indicating more data may now be sent.

III. POWER SUPPLIES

The Vidiot requires +12vdc @ 4A unregulated voltage for its operation. All board voltages are derived from this source. The video uP and its circuitry require +5vdc, which is generated from this unregulated input by VR1, CR1, CR2, CR3, C50, C51, C52 and C53. The sound uP and its circuitry also require +5vdc, which is generated by VR2, C56, C57, C58 and C59. The Video Amp Dematrix section requires +8.2vdc, which is generated by VR4, R106 and C89. The Self-Test indicator, Low pass filter and Power Amp require +12vdc unregulated which is obtained from the +12vdc input to the module. This unregulated voltage is filtered for ESD protection before being used by any power supply by L1, C41, C43 and C44.

IV. RESET CIRCUIT

On power-up the uP chips require that +5v +/− .25v DC be applied for 100 milliseconds before their RESET lines are allowed to swing from 0 to 4.8v. The RESET circuit on the Vidiot module works with the unregulated voltage to the regulator VR1 to prevent the REST line from going high until the +5v supply has had time to stabilize after power on. Zener diode VR3 and transistors Q4 and Q5 with R66 through R71 form a Valid Power Detector circuit that monitors the input voltage to VR1. This regulator requires a minimum of +7.5v input before it provides a +5v output. When this condition has been met diode CR6 allows C90 to charge through R63. This RC time constant provides the initial 100 MSEC delay to allow the uP oscillators to stabilize. The voltage across C90 is monitored by Q2, Q3, CR4, CR5 and R57 through R62. When it has reached about +2.5v the RESET line snaps high to allow the uPs to start program execution. In the event that the input to VR1 drops below +7.5v for an instant the Valid Power Detector quickly discharges C90 through R64 and CR6 to re-prime the RC time constant and insure a correct RESET cycle when power is re-applied.

This RESET signal is applied to the video uP U8, the video PIA U7, the VDP U16 and the sound uP U27. It is also used to set the mode of operation for the sound uP U27 via Q6, R77, CR7 and CR8. This circuitry forces a 010 code on P20, P21 and P22 of the sound uP during RESET which causes the sound uP to come up in an internal RAM, external ROM, multiplexed address/data mode.

V. VIDEO SECTION

The Vidiot module video section is made up of three sub-sections. The video uP, its address decoder, program RAM and program ROM form one section. The communication interface forms another sub-section, and the Video Display Processor, Video RAM and Video Amp Dematrix the last sub-section.

A) Video uP, address decode, program RAM and ROM

The Vidiot module uses a high performance 8 bit microprocessor the MC6809 as its video uP U8. This uP provides many 16 bit operations and a compact orthogonal instruction set with versatile addressing modes that maximizes the program performance. A bus cycle begins on the MC6809 with the address and R/W lines changing to a known state. Shortly after they are stable the Q (quadrature) clock output goes high. One quarter of a bus cycle later the E (enable) clock output goes high. The addressed device on the bus places its data on D0-D7 (R/W high) or takes its data from D0-D7 (R/W low) during the E clock. The bus cycle terminates when E goes low.

Addresses are decoded by U15 to determine which bus device the MC6809 is accessing. This is a dual 2 to 4 line decoder and the high-order address line A15 is used to enable one half or the other. When A15 is high the program ROMs U9, U10, U11 or U12 are selected. If A15 is low the interface circuitry, PIA U7, VDP U16 or program RAM U13 and U14 are selected. Both halfs of the decoder U15 are enabled by the E clock from U8 to time the data transfer on the bus.

The program RAM is provided by U13 and U14. These are 1K x 4 NMOS static RAM. The data bus D0-D7 is split in half with D0-D3 connected to U13 and D4-D7 connected to U14. Both parts are selected by the decoder at the same time and the R/W line from U8 is used to perform a read cycle (R/W high) or a write cycle (R/W low).

The program ROM is provided by U9, U10, U11 and U12. These 29 pin sites may be configured to accept 2K, 4K or 8K ROMs giving a maximum of 32K of video program storage.

B) Communication Interface

The interface sub-section consists of U1, U2, U3, U4, U6 and U7. These parts work with the video uP U8 to provide MPU-Vidiot communication, Vidiot switch reading, and video-sound uP communication. The MPU-Vidiot communication was explained under NORMAL OPERATION above and will not be detailed here. The switch reading is performed by U7 which provides four switch strobes and eight switch returns that operate similar to the MPU switch read. The video sound communication uses the low order four switch returns of U7 and a strobe line. The information is passed as two half-bytes (nybbles) over these four lines one per edge of the strobe (CB2). The current timing for this process is shown below.

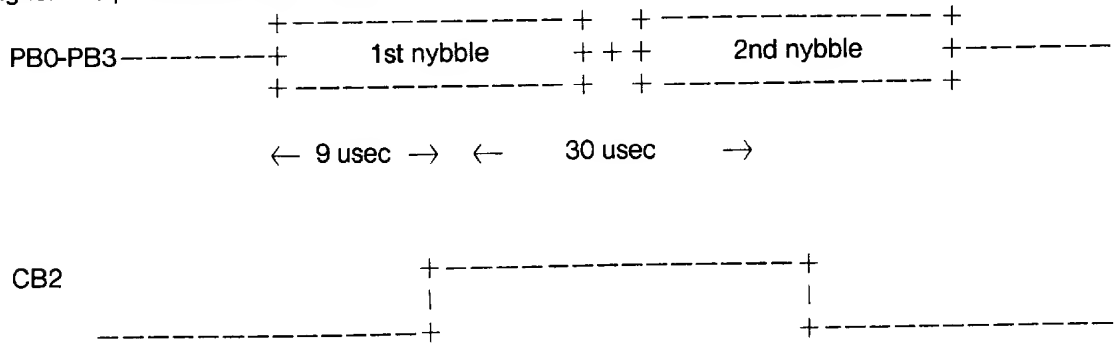

C) Video Display Processor, Video RAM, Video Amp Dematrix

The heart of the Vidiot module is the VDP U16. This LSI chip provides high resolution video capability. The VDP provides all necessary video, control and synchronization signals and also controls the storage, retrieval and refresh of data in the dynamic screen memory (VRAM). It provides a 256 x 192 pixel pattern display in 15 colors and 32 object oriented patterns (sprites) that may be easily and smoothly moved with a minimum number of data operations. The video uP U8 communicates with the VDP over its data bus with three control lines. With this interface the uP can read or write to the VRAM, write to the VDP control registers and read the VDP state. The VDP interrupts the uP at the end of each raster scan to allow the uP to update the VRAM during the blank screen vertical interval.

The screen image is generated from data stored in the VRAM. The VRAM is connected to the VDP with two 8 bit buses and three control lines. The RAMs U19 through U26 form an array of 16384 x 8 bits of memory. The dynamic memories use a multiplexed address/data bus. First the row address is output by the VDP and the RAS signal is issued. Next the column address is output followed by CAS. The data is read in when VDP R/W is high or written when R/W is low. The dynamic memories require periodic refreshing of their contents to keep it intact. The VDP uses a RAS only cycle to refresh the RAMs.

The TMS9928ANL VDP outputs color difference signals, luminance (Y), red minus luminance (R−Y) and blue minus luminance (B−Y). The synchronizing information for the raster timing is contained in the Y output. These outputs have to be converted to red (R), green (G), blue (B) and SYNC signals for the color monitor. The Video Amp Dematrix does this and amplifies the signals to the levels required by the monitor. Operational amplifiers U17 and U18 are high-speed current-mirror circuits. The Y and R−Y signals are summed at the plus input to U17 by R91 and R93 and amplified. These signals also contain a DC offset voltage that must be removed. Potentiometer RT3 and R98 inject an adjustable current into the minus input of U17 which removes this offset and allows the red level to be adjusted. Likewise the Y and B−Y signals are summed in another section of U17 by R84 and R85 and amplified. Potentiometer RT1 and R90 act to remove the DC offset and allow blue level adjustment. The R−Y and B−Y signals have encoded in them a G−Y component. Resistors R86 and R92 sum this component and present it to the minus input of U18 where it has the Y component added via R100. Potentiometer RT4 and R103 remove the DC offset and allow the green level to be adjusted. The synchronization information in the Y output is obtained by detecting the lowest levels of this signal. The other half of U18 forms a comparator which compares the Y signal level against a reference provided by RT2 and R94. When the Y signal goes below the reference level the output of U18 goes low providing a negative going SYNC signal for the monitor.

VI. SOUND SECTION

The sound section of the Vidiot module consists of two sub-sections. The sound uP, its bus demultiplexor, address decoder and program ROM form one section. The D to A converter, low pass filter and power amplifier form the other.

A) Sound uP, bus demux, address decode and program ROM

The Vidiot module uses a single chip microcomputer the MC6803 as its sound uP U27. This uP provides two I/O ports, 128 bytes of RAM, a multifunction timer and external ROM capability. A bus cycle begins on the MC6803 with the address/data and R/W lines changing to a known state. Shortly after they are stable the AS (address strobe) clock is output. This is used to latch the low order address lines A0-A7 from the AD0-AD7 bus via U28. After AS goes low the AD0-AD7 lines become the D0-D7 data bus. One half of a bus cycle later the E (enable) clock output goes high. The addressed device on the bus places its data on AD0-AD7 (R/W high) or takes its data from AD0-AD7 (R/W low) during the E clock. The bus cycle terminates when E goes low.

Addresses are decoded by U31 to determine which external bus device the MC6803 is accessing. Address line A15 must be high to address the program ROMs U29 and U30. Address line A14 determines which ROM is selected. When A14 is high U29 is selected. When A14 is low U30 is selected. The E clock is used to qualify the decoding to time the data transfer and remove the ROMs from the AD0-AD7 bus for low order address latching into U28.

The program ROM is provided by U29 and U30. These 28 pin sites may be jumpered to accept 2K, 4K or 8K ROMs giving a maximum of 16K of sound program storage.

B) D to A, low pass filter and power amplifier

Sounds are generated by waveform synthesis using a D to A converter. The converter is supplied with 8 bit data from one of the MC6803 I/O ports P10-P17. The uP actually constructs waveforms by controlling the D to A. The D to A converter is a low-cost single-supply part with a voltage output that is proportional to the binary input code and the reference voltage input. A 2.5vdc reference with a low slope resistance is developed by Q7, R79, R80, R81 and C92. The D to A output voltage varies from 2.5vdc with an input of 11111111 to Ovdc with an input of 00000000.

The constructed waveform contains unwanted frequency components due to its formation. These are removed by a fifth-order Butterworth response low pass filter. The filter is formed by U33, R109 R118, C102 C106. The output of the filter is developed across RT5 which allows the volume to be adjusted.

The adjusted signal level is fed to the power amplifier U34 via C112. Device U34 is an 8 watt power amplifier. Network C107, R120 and R121 form a feed-back circuit that sets the gain of the amplifier to 40db. Network C108 and R119 rolloff the high frequency response of the amplifier to provide stability and minimize noise. Capacitor C109 couples the signal to the speaker while blocking the DC component and R122 and C110 form a high frequency shunt to suppress bottomside signal oscillation.

Service Set-Up Procedure

NOTE: All monitors are equipped with automatic degaussing coils which effectively demagnetize the picture tube each time the monitor is turned on. The degaussing coils will operate any time the set is turned on after having been off for at least five minutes.

The degaussing effect is confined to the picture tube since the coils are mounted on the ferrous tube shield. Should any part of the chassis or cabinet become magnetized, it will be necessary to degauss the affected area by means of a manual degaussing coil. Move the coil slowly around the CRT face area, then slowly withdraw for a distance of six feet before disconnecting the coil from the AC power supply.

Normally little, if any adjustment should be necessary. However, when a picture tube, yoke or similar component is replaced, preliminary static convergence should be done before attempting purity adjustment, and so on.

Set up should be done in a north/south direction. Horizontal and vertical centering taps should be set to the centre position if a major component has been changed.

1.0 Purity

1.1 Loosen yoke retaining clamp (figure 2), remove adhesive material fixing wedges to CRT. Remove wedges completely and clean off dried adhesive from picture tube and wedges.

1.2 A small quantity of "nail polish" has been used to lock the purity convergence rings in place. This seal must be broken with a sharp tipped instrument before any adjustments are attempted. Some models also use a locking ring at either end of the purity and convergence rings. This must be loosened before adjustments are made. It goes without saying that upon completion of all adjustments, the lock must be reset and/or a dab of paint or nail polish must be re-applied to edge of rings to prevent movement.

1.3 Connect an appropriate signal source, eg: Electrohome RGB generator producting a white field plus individual red, green and blue fields.

1.4 Bring the long and short purity tab protrusions in line with each other to obtain near-zero magnetic field (figure 4) (In some cases bring the flat and indented tabs together to obtain zero field). Protrusions can then be vertical, horizontal or at any convenient angle to start.

1.5 Turn off the green and blue fields and adjust setup controls to produce a red field. (See fig. 3)

1.6 Pull the deflection yoke back so that a red band appears in the centre of the screen.

1.7 Spread the tabs apart as little as necessary and rotate both rings together to center the red band horizontally on the face of the CRT (approximate). (See Fig. 5)

1.8 Slide the yoke towards the bell of the picture tube slowly to obtain a uniform red field (pure in color) across the entire tube face. Juggle back and forth slightly as necessary. Lightly tighten yoke retaining clamp.

1.9 Momentarily switch on a cross-hatch signal and rotate yoke to level the pattern on the face of CRT.

1.10 Return generator to regain red raster.

1.11 Turn off red field and check for pure field for each of the green and blue fields. Reposition yoke if necessary to obtain optimum purity on all fields.

1.12 Tighten yoke retaining clamp to prevent yoke shift or rotation. (Do not install wedges at this time.)

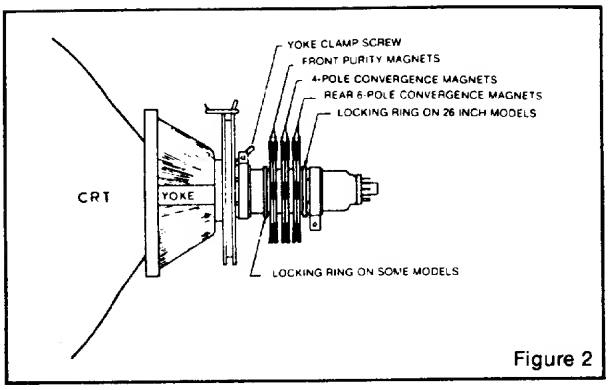

Figure 2

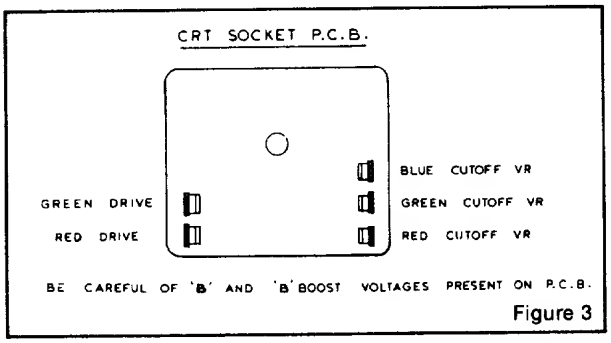

Figure 3

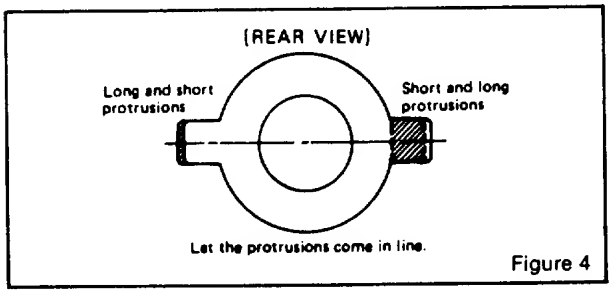

Figure 4

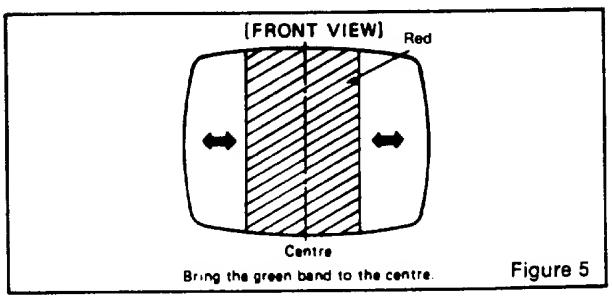

Figure 5

2.0 Static and Dynamic Convergence

NOTE: Static convergence is achieved by four magnets located on the neck, nearest the base of the picture tube, Fig. 2. The middle pair of magnetic rings are adjusted to converge the blue and red crosshatch lines. The rear pair of convergence rings (closest to the base of the picture tube) are adjusted to converge the magenta (blue/red) to the green crosshatch lines. Dynamic convergence is achieved by tilting the deflection yoke up-down and left-right.

2.1 Ensure that the controls misadjusted during purity setup (screen, cut-off, etc.) are set to give white balance. See 3.0 below.

2.2 Switch generator to the crosshatch pattern.

2.3 Adjust convergence around the edges of the picture tube by tilting the yoke up-down and left-right, and temporarily install one wedge at the top of the yoke or in a more optimum position. (Figures 8, 9, 10)

2.4 Turn off green input and turn on the red and blue input.

2.5 Rotate the 4-pole (middle) pair of magnets as a unit to minimize separation of the red and blue crosshatch lines around the center of the screen (Figure 6). Variation of the angle between the tabs adjusts convergence of red and blue. (Tilt yoke as required to converge red and blue at the edges as in 2.3 above.)

2.6 Turn on green input to obtain magenta (red/blue) and green crosshatch lines. Rotate the 6-pole (rear) pair of magnets as a unit to minimize separation of the magenta and green lines (figure 7). Vary angle between the two tabs and further rotate as a unit to finalize.

2.7 When converence of 3 colors is optimized (static in center and dynamic around edges) apply stripe of paint or nail polish to converence magnet rings to prevent movement. If applicable, tighten locking ring carefully.

2.8 Remove temporary wedge from yoke. Tilt yoke in up-down and left-right direction for best circumference convergence and install 3 wedges. (It is best to use 3 new wedges since they have adhesive backing. Simply pull off tape, slide wedge in place and press outer flap down firmly. For more permanency apply small quantity of silastic or similar material at junction of wedges and picture tube. Do not disturb while material is setting. (Order wedges by part number 39-1233-01).

3.0 White Balance (Grey Scale Tracking)

Refer to figure 3. Do the following in subdued light:

3.1 Note this adjustment can be accomplished with no signal connected; eg: input connector open or if a signal generator is connected, switch off all 3 inputs at the generator.

3.2 Set red and green drive controls to their mechanical center and turn the common G2 screen control and 3 cut-off controls to minimum (fully counterclockwise).

3.3 Slowly turn up G2 screen control until the first faint color appears, then back off to edge of visibility. Do not touch the associated cut-off control - it should stay fully CCW for the remaining set-up.

3.4 Slowly turn up the other two color cut-off controls in turn to match the first. This should result in the faintest grey.

3.5 Turn on the signal generator with all 3 inputs on. (a crosshatch pattern would be appropriate).

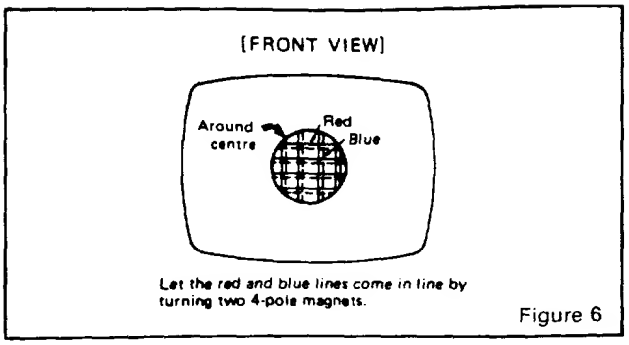

Let the red and blue lines come in line by turning two 4-pole magnets.

Figure 6

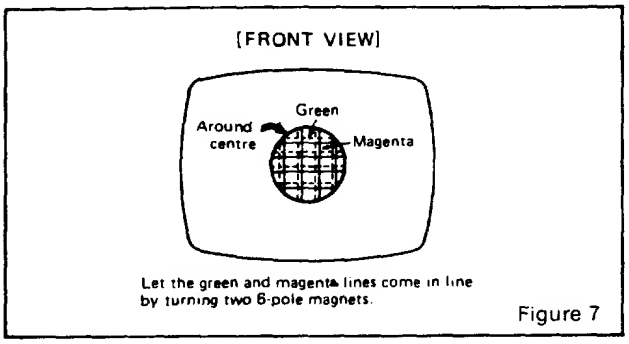

Let the green and magenta lines come in line by turning two 6-pole magnets.

Figure 7

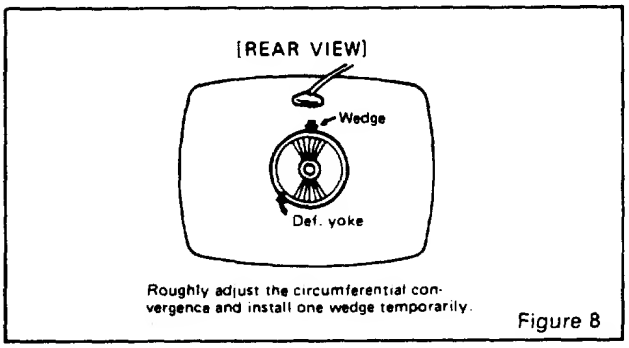

Roughly adjust the circumferential convergence and install one wedge temporarily.

Figure 8

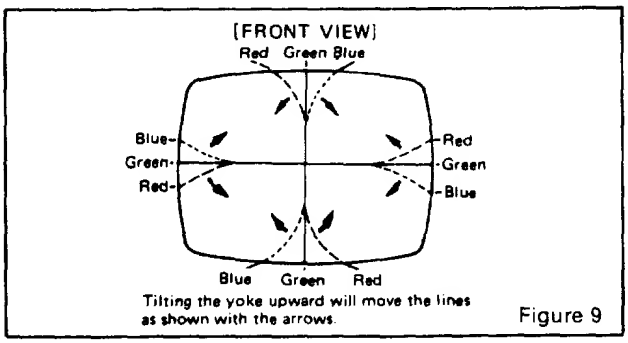

Tilting the yoke upward will move the lines as shown with the arrows.

Figure 9

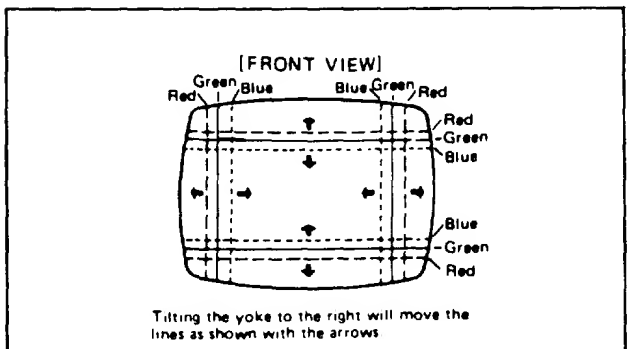

Tilting the yoke to the right will move the lines as shown with the arrows.

Figure 10

3.6 Adjust the red and green drive controls for "neutral white" on high white picture areas. Generally these controls will be left at mech. centre.

3.7 Note: When monitor is re-connected with the game the screen control (G2) may require a slight adjustment to obtain proper black level. (the black portion of picture just extinguished).

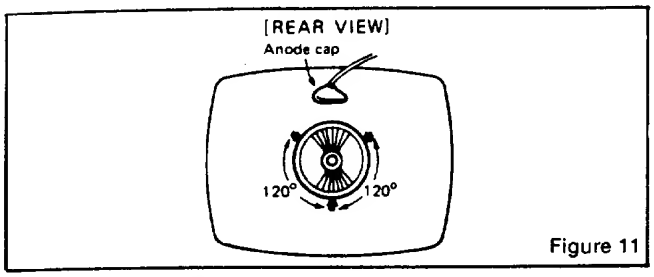

Figure 11

4.0 Power Supply

The regulated +B1 control (R909) has been factory adjusted and normally requires no adjustment. However, if any repairs have been made to the chassis it is recommended that this adjustment should be made.

a) Allow 5 minutes to warm up.
b) No signal applied.
c) Connect an accurate D.C. voltmeter to TP-91 or the emitter of X04 power regulator transistor.
d) Adjust R909 for 120V. (See fig. 1)

Note:

Should +B1 control be set too high, it may cause possible component damage. Use an accurate D.C. voltmeter to set B1 (B+).

5.0 Focus

Adjust focus control for best overall definition and picture detail an average signal applied. (Highlights should be favoured.)

6.0 Color Service Generator for G07 Monitor

Electrohome has developed a color service generator that is specifically designed for use with the G07 color data monitor. It provides the monitor with both horizontal and vertical sync, as well as the following test patterns:

1) Fine cross-hatch pattern
2) Broad bar cross-hatch pattern
3) Complete field

Three color selection switches, red, green and blue, provide the ability to display the above patterns in the three primary colors as well as the three secondary colors.

This product may be ordered from:
Contracts Marketing
ELECTROHOME Electronics
809 Wellington St. North
Kitchener, Ontario
Canada N2G 4J6
Telephone: (519) 744-7111, Ext. 567

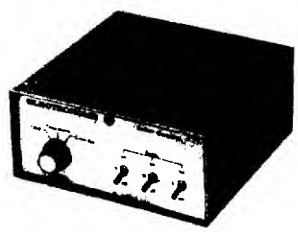

7.0 X-Ray Emission Check

7.1 Assure the power supply B1 is properly adjusted to 120V DC. See Item 4.0 (page 8)

7.2 Assure that the anode voltage does not exceed max. as per Item 2.0 page 4.

7.3 Assure that the high voltage hold down circuit is operating correctly. Use the following procedure.

a) Increase the B1 greater than 138.5V by shorting collector/emitter of the power regulator, X04.

b) Observe that the anode voltage (EHT) goes to 0. If the EHT does not go to 0, a fault must be located and repaired.

c) Remove short and set should return to normal operation. (Note, after the short is removed some monitors may not restart. In this case, remove power from monitor momentarily and normal operation will be restored.

Note:

The protector circuit consists of the components shown below in Fig. 13 with a circuit description.

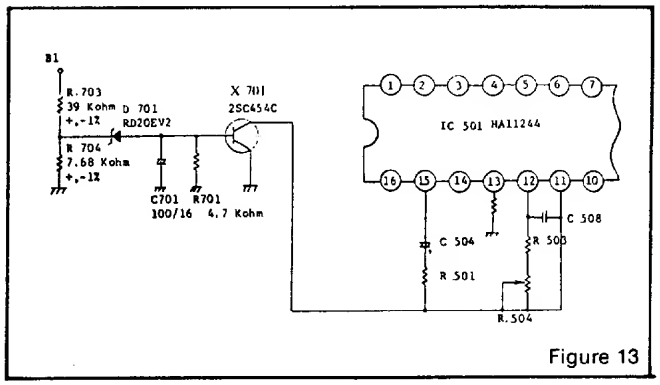

Figure 13

8.0 Circuit Diagram and Description of High Voltage Hold Down or Safety Circuit

8.1 Circuit Diagram of High Voltage Hold Down Circuit.

8.2 Operation of High Voltage Hold Down Circuit.

The high voltage hold-down circuit protects the high voltage circuit from dangerous voltage with short circuiting between emitter and collector of power regulating transistor.

The base voltage of X701 is increased when the B1 voltage is increased more than 138.5 V DC.

When the base of X701 is increased, a short is produced by X701 between pin 11 and ground of IC 501, shutting down the horizontal osc. and high voltage.

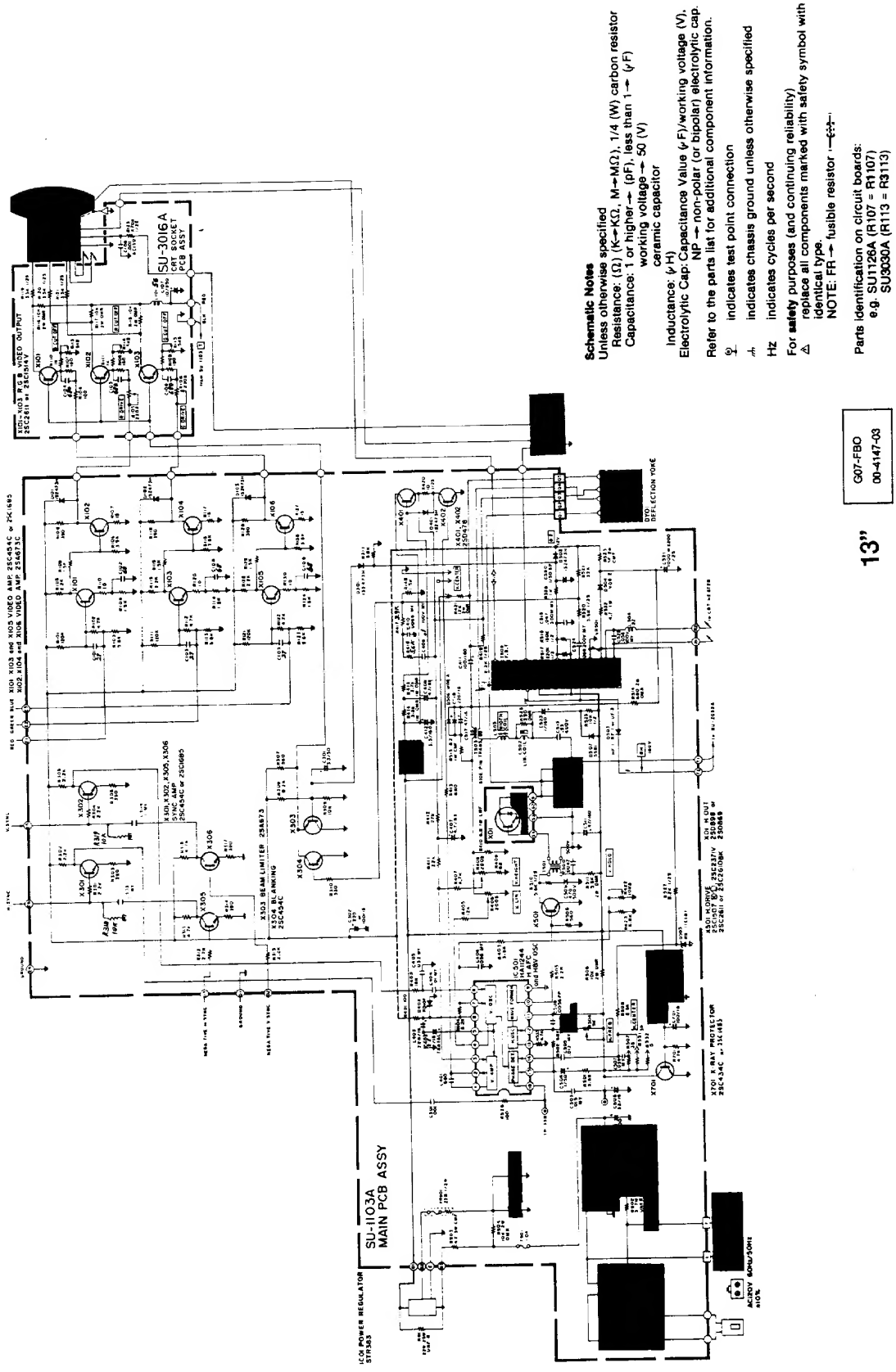

NOTE: ON THE 13 INCH G07-902, THE FRONT TWO RINGS, AFTER THE RETAINING LOCK RING, ARE FOR BLUE AND RED LINE SEPARATION. THE MIDDLE RINGS ADJUST GREEN TO MAGENTA, AND THE BACK RINGS ADJUST PURITY. ON THE 19 INCH G07-904, THERE IS NO RETAINING LOCK RING, THE FRONT RINGS ADJUST PURITY. THE MIDDLE PAIR ADJUST RED AND BLUE LINES, AND THE BACK PAIR ADJUST GREEN TO MAGENTA.

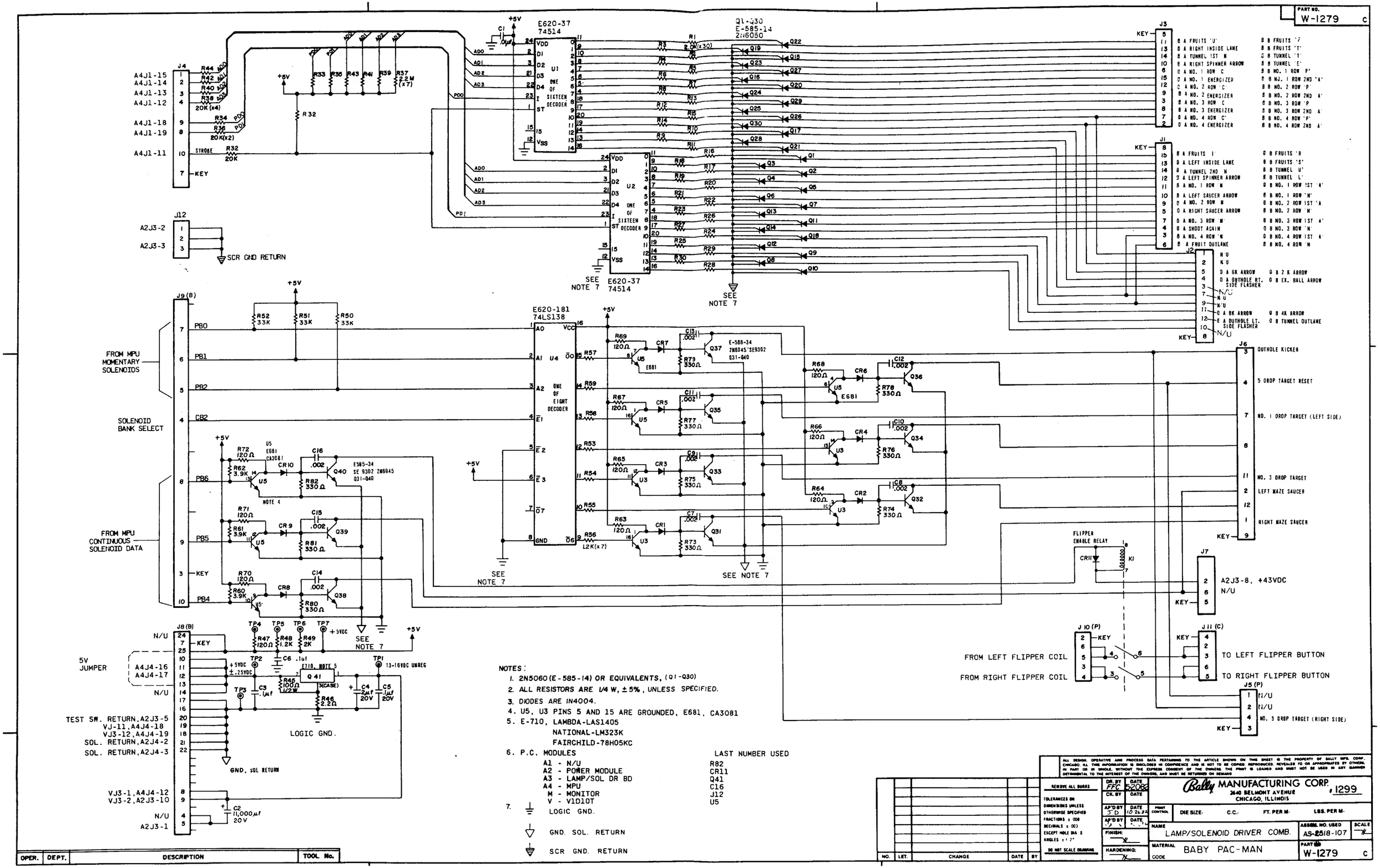
PART NO. W-1279 C
E620-37 74514
Q1-Q30 E-585-14 2N6050
E620-181 74LS138
FROM MPU MOMENTARY SOLENOIDS
SOLENOID BANK SELECT
FROM MPU CONTINUOUS SOLENOID DATA
SCR GND RETURN
SEE NOTE 7
OUTHOLE KICKER
5 DROP TARGET RESET
NO. 1 DROP TARGET (LEFT SIDE)
NO. 3 DROP TARGET
LEFT MAZE SAUCER
RIGHT MAZE SAUCER
FLIPPER ENABLE RELAY
A2J3-8, +43VDC
FROM LEFT FLIPPER COIL
FROM RIGHT FLIPPER COIL
TO LEFT FLIPPER BUTTON
TO RIGHT FLIPPER BUTTON
NO. 5 DROP TARGET (RIGHT SIDE)
5V JUMPER
TEST SW. RETURN, A2J3-5
VJ-11, A4J4-18
VJ3-12, A4J4-19
SOL. RETURN, A2J4-2
SOL. RETURN, A2J4-3
LOGIC GND.
GND, SOL RETURN
VJ3-1, A4J4-12
VJ3-2, A2J3-10
A2J3-1
NOTES:
1. 2N5060 (E-585-14) OR EQUIVALENTS, (Q1-Q30)
2. ALL RESISTORS ARE 1/4 W, ±5%, UNLESS SPECIFIED.
3. DIODES ARE 1N4004.
4. U5, U3 PINS 5 AND 15 ARE GROUNDED, E681, CA3081
5. E-710, LAMBDA-LAS1405
NATIONAL-LM323K
FAIRCHILD-78H05KC
6. P.C. MODULES
A1 - N/U
A2 - POWER MODULE
A3 - LAMP/SOL DR BD
A4 - MPU
M - MONITOR
V - V1D10T
LAST NUMBER USED
R82
CR11
Q41
C16
J12
U5
7. LOGIC GND.
GND. SOL. RETURN
SCR GND. RETURN
OPER. DEPT. DESCRIPTION TOOL No.
REMOVE ALL BURRS
TOLERANCES ON DIMENSIONS UNLESS OTHERWISE SPECIFIED
DO NOT SCALE DRAWING
Bally MANUFACTURING CORP.
2640 BELMONT AVENUE
CHICAGO, ILLINOIS
#1299
NAME LAMP/SOLENOID DRIVER COMB.
MATERIAL BABY PAC-MAN
ASSEM. NO. USED AS-2518-107
PART NO. W-1279 C

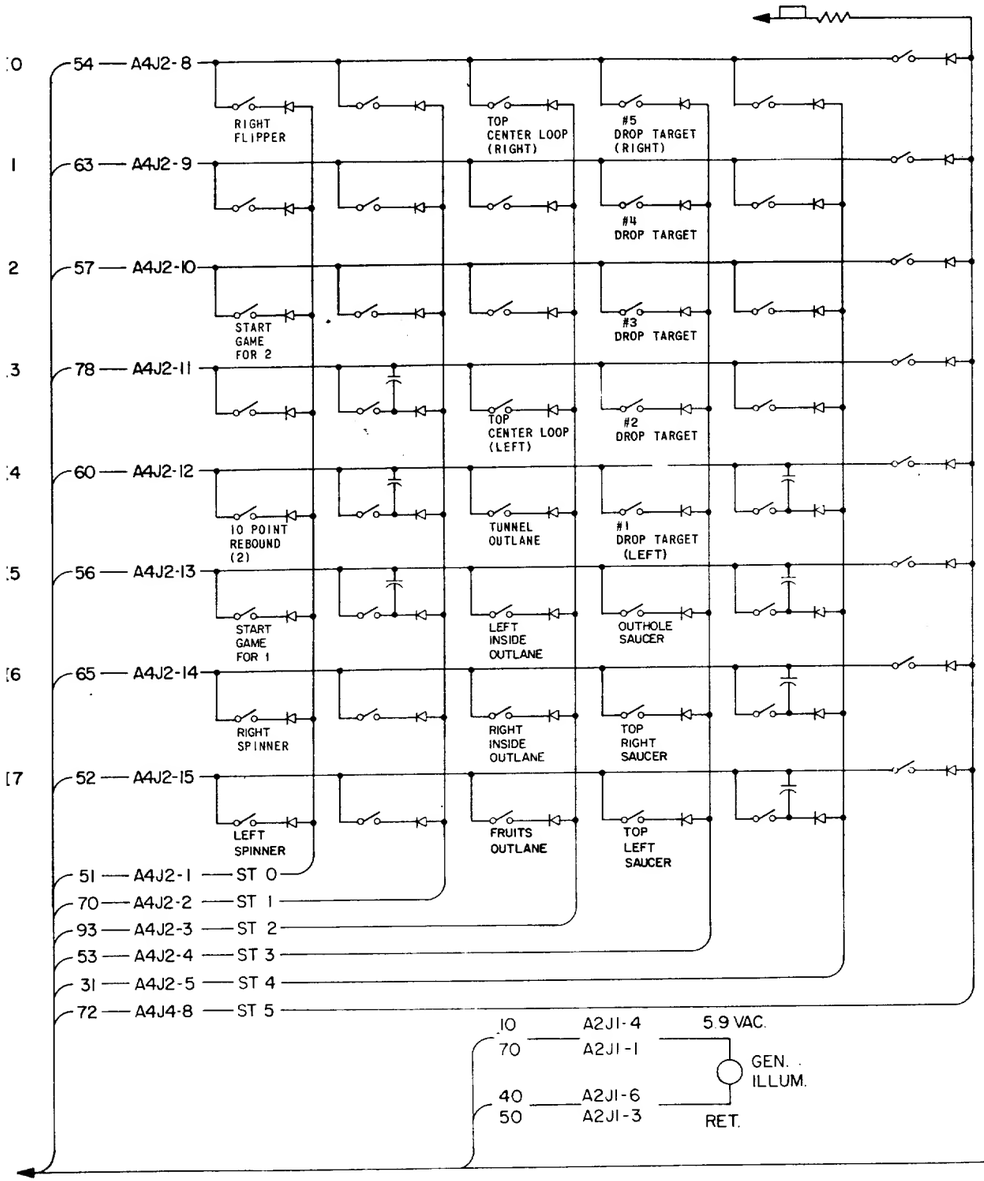

PLAYFIELD A6

NOTES

1. INDICATES NOT USED
2. N/U = NOT USED ON PLAYFIELD
3. ✱ INDICATES AID TEST POINT
4. COIL DIODES ARE IN4004 (E-587-6) SWITCH DIODES ARE IN4148 (E-587-14) ALL CAPACITORS ARE .05 MFD. (E-586-80)
5. GERMANY ONLY - CAPACITOR .01 MFD. @ 500 V. (E-586-65)

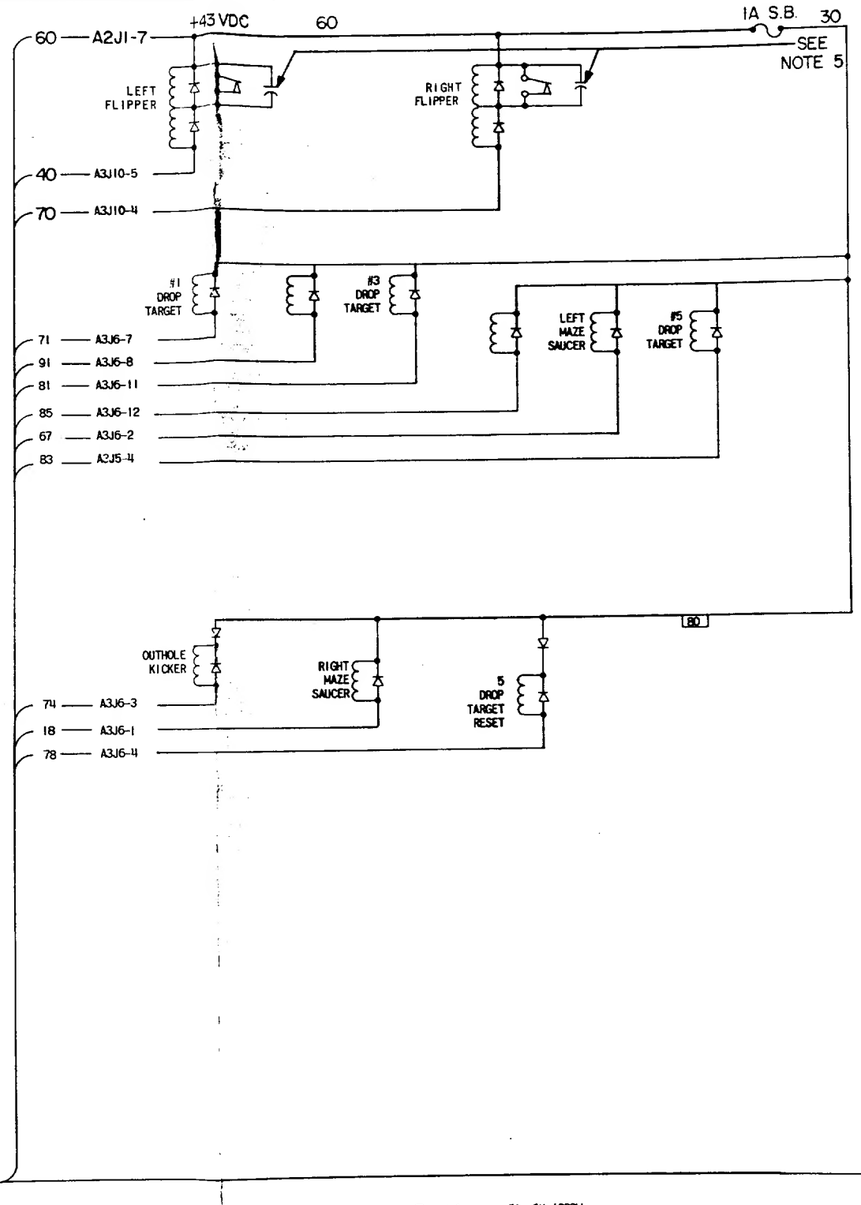

THE INFORMATION, IDEAS AND PROCESS DATA PERTAINING TO THE ARTICLES SHOWN ON THIS SHEET IS THE PROPERTY OF BALLY MFG. CORP. AND IS NOT TO BE USED IN WHOLE OR IN PART, NOR DISCLOSED TO OTHERS, WITHOUT THE EXPRESS CONSENT OF THE OWNER. THE PRINT IS LOANED SUBJECT TO THE AGREEMENT THAT IT WILL NOT BE COPIED IN WHOLE OR IN PART, AND THAT IT WILL BE RETURNED ON DEMAND.

REMOVE ALL BURRS	DR BY	DATE 10-22-82	Bally MANUFACTURING CORP 8_1280
UNLESS OTHERWISE SPECIFIED DIMENSIONS ARE IN INCHES AND TOLERANCES ARE AS FOLLOWS: FRACTIONS ±1/64 DECIMALS .XX ±.01 .XXX ±.005 ANGLES ±1°	CH BY	DATE 10-26-82	2640 BELMONT AVENUE CHICAGO ILLINOIS
DO NOT SCALE DRAWING	APP'D BY J.D.	DATE 10-28-82	FINISH N/A
	APP'D BY	DATE 12-2-82	NAME WIRING DIAGRAM PLAYFIELD
			MATERIAL BABY PAC-MAN
			SIZE B SCALE NONE
			PART NO. W-1280 C

L	PART NO. W-1281	C

WIRE COLOR CODE

1.	RED - R-	6.	BROWN - BR-
2.	BLUE -BLU-	7.	ORANGE -O-
3.	YELLOW -Y-	8.	BLACK -B-
4.	GREEN -G	9.	GRAY
5.	WHITE -W-	0.	NO TRACER

1. FIRST NUMBER - BODY COLOR.
2. SECOND NUMBER - TRACER COLOR.

EXAMPLE: 50- WHITE
51- WHITE-RED

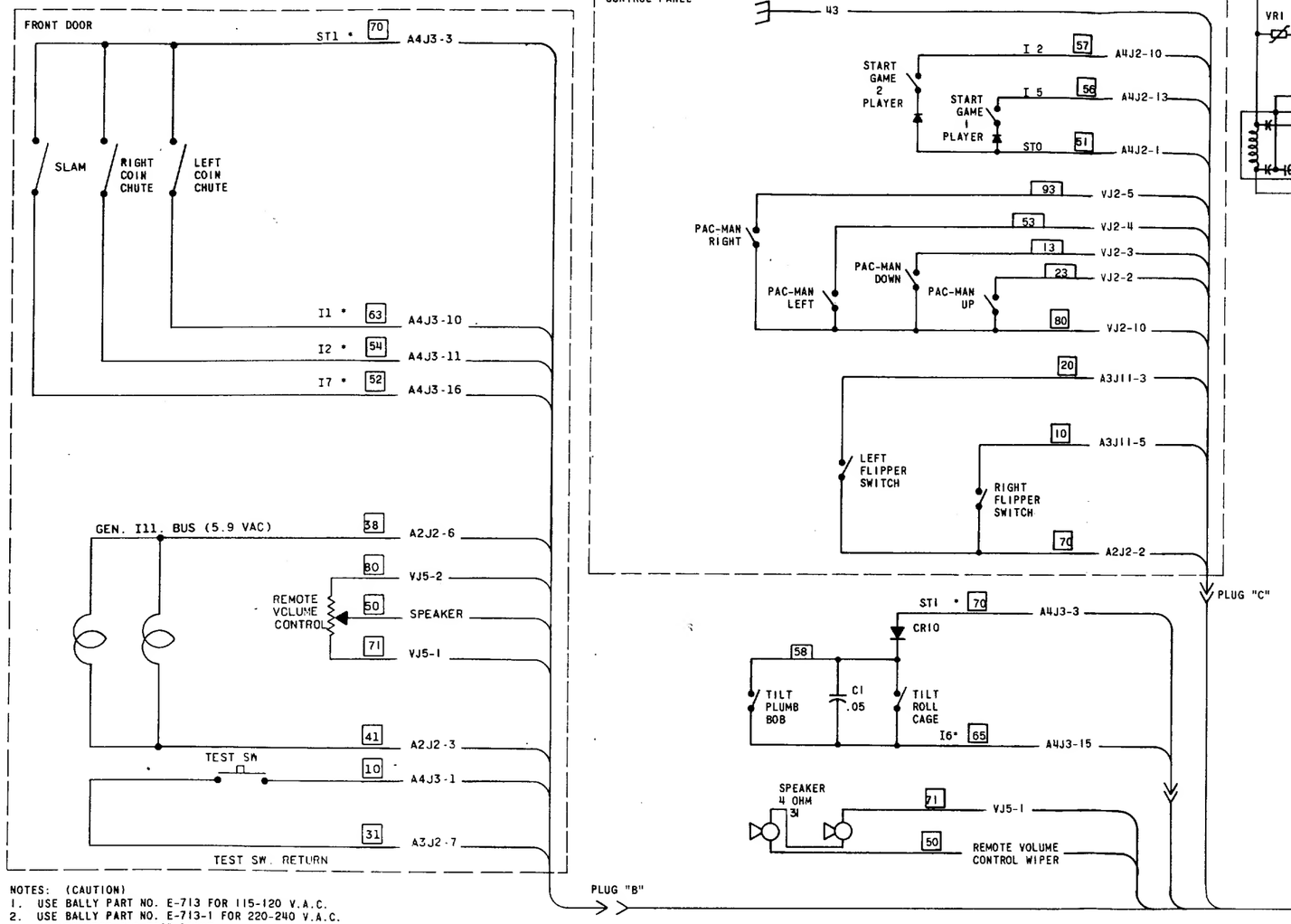

NOTES: (CAUTION)
1. USE BALLY PART NO. E-713 FOR 115-120 V.A.C.
2. USE BALLY PART NO. E-713-1 FOR 220-240 V.A.C.
3. * INDICATES AID TEST POINT.

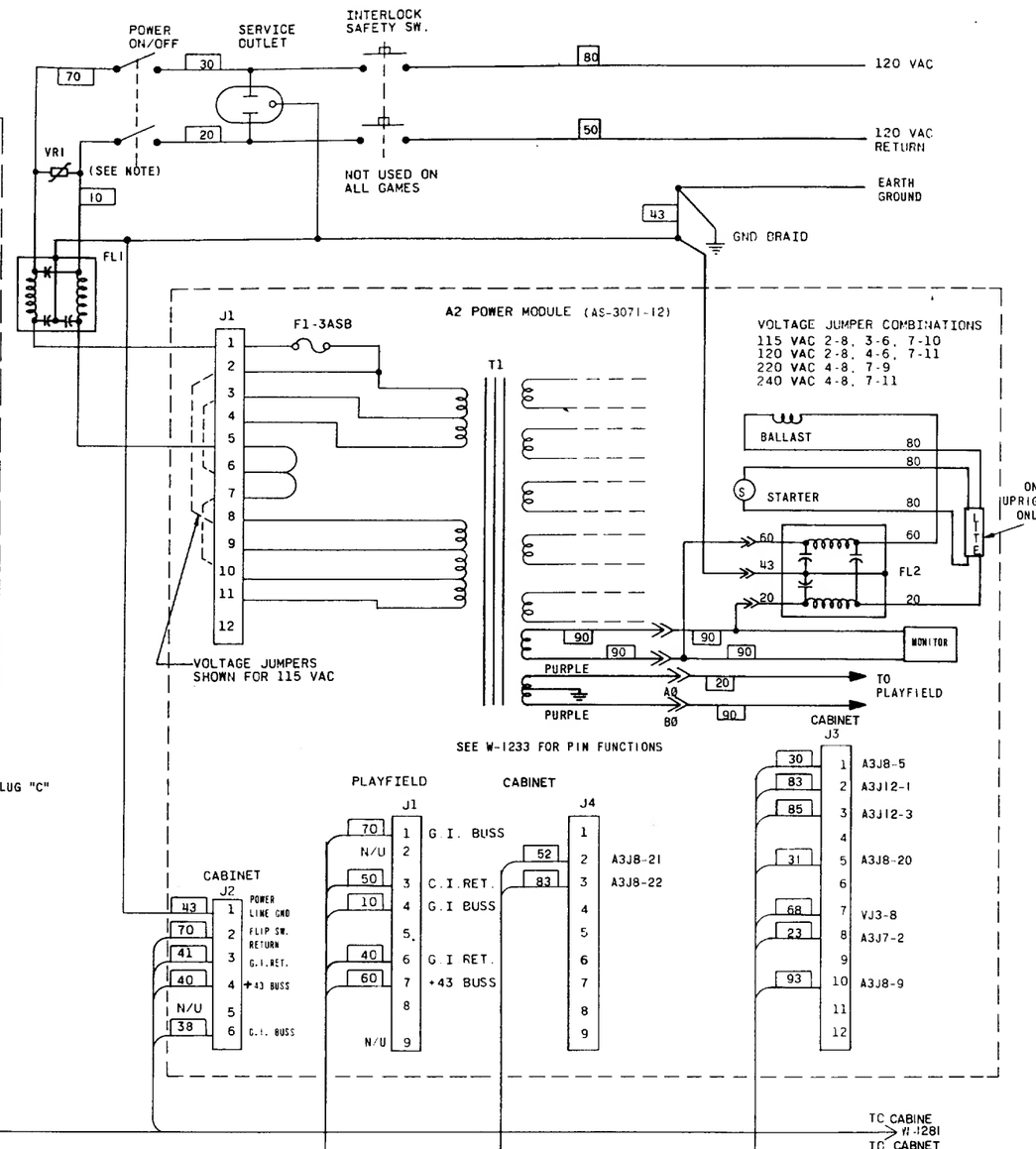

A7 CABINET ASS'Y. WIRING
NOTE: DIODES ARE IN4004, (E-587-6)

15 PIN PLUG B

FROM	PIN	WIRE
VJ5-1	1	71
	2	
A4J3-1	3	10
A3J2-7	4	31
A2J2-6	5	38
A2J2-3	6	41
A4J3-3	7	70
A4J3-11	8	54
A4J-10	9	63
	10	
A4J3-16	11	52
SPEAKER	12	50

FROM	PIN	WIRE
VJ5-2	13	80
	14	
	15	
FRONT DOOR		

15 PIN PLUG C

FROM	PIN	WIRE
A4J2-1	1	51
	2	
A4J2-13	3	56
	4	
	5	
A3J11-3	6	20
A3J11-5	7	10
VJ2-3	8	13
VJ2-2	9	23
VJ2-4	10	53
VJ2-5	11	93
VJ2-10	12	80

FROM	PIN	WIRE
A2J2-2	13	70
CHASSIS	14	43
A4J2-10	15	57
CONTROL PANEL		

OPER.	DEPT.	DESCRIPTION	TOOL No.

ALL DESIGN OPERATIVE AND PROCESS DATA PERTAINING TO THE ARTICLE SHOWN ON THIS SHEET IS THE PROPERTY OF BALLY MFG CORP CHICAGO. ALL THIS INFORMATION IS DISCLOSED IN CONFIDENCE AND IS NOT TO BE COPIED REPRODUCED REVEALED TO OR APPROPRIATED BY OTHERS IN PART OR IN WHOLE WITHOUT THE EXPRESS CONSENT OF THE OWNERS. THE PRINT IS LOANED AND MUST NOT BE USED IN ANY MANNER DETRIMENTAL TO THE INTEREST OF THE OWNERS AND MUST BE RETURNED ON DEMAND.

NO	LET	CHANGE	DATE	BY

REMOVE ALL BURRS
TOLERANCES ON DIMENSIONS UNLESS OTHERWISE SPECIFIED
FRACTIONS ± 1/64
DECIMALS ± .003
EXCEPT MOLE DIA. ±
ANGLES ± 1/2°
DO NOT SCALE DRAWING

DR BY A.	DATE 10-26-82	
CH BY	DATE 10-27-82	
APD BY	DATE	
APD BY	DATE	

Bally MANUFACTURING CORP
2640 BELMONT AVENUE
CHICAGO, ILLINOIS 1299

PRINT CONTROL

NAME	ASSEM NO USED	SCALE
FRONT DOOR WIRING DIAGRAM CONTROL PANEL CABINET		
MATERIAL BABY PAC-MAN	PART NO W-1281	C
CODE		

WIRE	FUNCTION	FROM	PIN
51	STO	A4J2-1	1
70	ST1	A4J2-2	2
93	ST2	A4J2-3	3
53	ST3	A4J2-4	4
31	ST4	A4J2-5	5
54	IO	A4J2-8	6
63	I1	A4J2-9	7
57	I2	A4J2-10	8
78	I3	A4J2-11	9
60	I4	A4J2-12	10
56	I5	A4J2-13	11
65	I6	A4J2-14	12
52	I7	A4J2-15	13
			14
			15
			16
			17
			18
			19
			20
			21
			22
			23
90	ØA ZXING	A4J4-15	24

PLAYFIELD PLUG

WIRE	FUNCTION	FROM	PIN
71	SOUND 1	VJ5-1	1
40	43V	A2J2-4	2
10	TEST SW	A4J3-1	3
31	TEST RET.	A3J8-20	4
38	GI	A2J2-6	5
41	GI	A2J2-3	6
70	SI	A4J3-3	7
54	IO	A4J3-9	8
63	I1	A4J3-10	9
57	I2	A4J3-11	10
52	I7	A4J3-16	11
50	SOUND VOLUME	SPEAKERS	12
80	SOUND 2	VJ5-2	13
65	I6	A4J3-15	14
78	I3	A4J3-12	15

PLUG B
TO FRONT DOOR

WIRE	FUNCTION	FROM	PIN
51	STO	A4J2-1	1
			2
56	IS	A4J2-13	3
54	IO	A4J2-8	4
63	I1	A4J2-9	5
20	L. FLIP	A3J11-3	6
10	R. FLIP	A3J11-5	7
13	DWN	VJ2-3	8
23	UP	VJ2-2	9
53	LEFT	VJ2-4	10
93	RIGHT	VJ2-5	11
80	VID ST	VJ2-10	12
70	FLIP SW. REF.	A2J2-2	13
43	E. GND	CHASSIS	14
57	I2	A4J2-10	15

PLUG C
TO CONTROL PANEL

→ TO P.S. (A2) SEE W-1281

MONITOR (M)

MONITOR PLUGS — TO

- 1 2 3 4 5 6
- 80 — VJ4-2
- 20 — VJ4-7
- 40 — VJ4-5
- 10 — VJ4-11
- 70 — VJ4-3
- 70 — VJ4-3

VIDIOT (V)

VJ1

1		
2		
63	3	A4J2-9
54	4	A4J2-8
50	5	A4J1-5
58	6	A4J1-6
62	7	A4J1-28
38	8	A4J1-27
25	9	A4J1-26
51	10	A4J1-25
67	11	A4J1-23
72	12	A4J1-22
31	13	A4J1-21
85	3	A4J1-20
84	15	A4J1-7
60	16	A4J2-12
78	17	A4J2-11
	18	
56	19	A4J2-13
57	20	A4J2-10
	21	
	22	KEY
65	23	A4J2-14
53	24	A4J2-9
52	25	A4J2-15
54	26	A4J2-8
	27	
	28	

VJ2

	1	
23	2	
53	3	VIDEO CONTROL SW'S.
93	4	
	5	
	6	
	7	
	8	
80	9	VIDEO SWITCH STROBE
	10	KEY
	11	
	12	
	13	
	14	
	15	
	16	
	17	
	18	
	19	
	20	

VJ5

70	1
80	2

VJ3

14	1	A3J8-8
93	2	A3J8-9
	3	
	4	KEY
	5	
43	6	EARTH GROUND TO CHASSIS
	7	
68	8	A2J3-7
	9	
	10	
81	11	A3J8-19
94	12	A3J8-18

VJ4

	1	
80	2	GND.
70	3	SYNC.
	4	
40	5	GREEN
	6	
20	7	BLUE
	8	
	9	
	10	KEY
10	11	RED
	12	

MONITOR SIGNALS

LAMP DRIVER P/O A3 (I)

J4 — TO

32	1	A4J1-15
13	2	A4J1-14
45	3	A4J1-13
48	4	A4J1-12
	5	
	6	
	7	KEY
74	8	A4J1-18
71	9	A4J1-19
75	10	A4J1-11

J2 — TO

	1	
	2	
85	3	
95	4	
	5	
	6	
70	7	
	8	KEY
	9	
	10	
35	11	
91	12	

J1 — TO

	1	
35	2	
56	3	
95	4	
84	5	
91	6	
	7	
	8	KEY
14	9	
81	10	SEE W-1280 FOR LITE LOCATIONS FOR J1, J2 & J3
15	11	
20	12	
21	13	
53	14	
10	15	

J3 — TO

72	1	
64	2	
	3	
	4	
	5	KEY
25	6	
23	7	
78	8	
30	9	
13	10	
43	11	
40	12	
36	13	
67	14	
98	15	

J12

83	1	A2J3-2
	2	
85	3	A2J3-3

VOLTAGE REGULATOR/SOLENOID DRIVER P/O A3 (I)

J9 — TO

	1	N/U
	2	
	3	KEY
61	4	A4J4-10
78	5	A4J4-2
21	6	A4J4-3
23	7	A4J4-4
25	8	A4J4-7
27	9	A4J4-6
72	10	A4J4-5

J8 — TO

	1	
	2	
	3	
	4	
30	5	A2J3-1
	6	
	7	KEY
14	8	VJ3-1
93	9	A4J4-12
	10	A2J3-16
96	11	VJ3-2
54	12	A4J4-16
64	13	A4J4-17
	14	A3J3-25
	15	
	16	
	17	
94	18	VJ3-12
81	19	A4J4-15
31	20	VJ3-11
52	21	A4J4-19
82	22	A2J3-5
	23	TEST SW. RETURN
	24	A2J4-2
64	25	A2J4-3
		A3J3-13

J11 — TO

	1	
	2	
20	3	L. FLIP SW.
	4	KEY
10	5	R. FLIP SW.
	6	

J7

	1	
23	2	A2J3-8
	3	
	4	
	5	KEY
	6	

J10 — TO

	1	
	2	KEY
	3	
70	4	R. FLIP-COIL
40	5	L. FLIP-COIL
	6	

J6 — TO

18	1	RIGHT MAZE SAUCER
67	2	LEFT MAZE SAUCER
74	3	OUTHOLE KICKER
78	4	5 DROP TAR. RESET
	5	
	6	
71	7	#1 DROP TARGET
91	8	
	9	KEY
81	10	#3 DROP TARGET
85	11	
	12	

J5

	1	
	2	
	3	KEY
83	4	#5 DROP TARGET
	5	
	6	

MPU A4 (C)

J5

	1	D7
	2	D6
	3	D5
	4	D4
	5	D3
	6	D2
	7	D1
	8	D0
	9	A15
	10	A12
	11	A11
	12	A10
	13	A9
	14	A8
	15	A7
	16	A6
	17	A5
	18	A4
	19	A3
	20	A2
	21	A1
	22	A0
	23	R/W
	24	HLT
	25	RES
	26	VMA
	27	Ø2
	28	EX. MEM.
	29	KEY
	30	5 V.D.C.
	31	GND
	32	A4U11-18

TEST CONNECTOR

J1 — TO

	1	
	2	
	3	
	4	
50	5	VJ1-5
58	6	VJ1-6
84	7	VJ1-15
	8	
	9	KEY
	10	
75	11	A3J4-10
48	12	A3J4-4
45	13	A3J4-3
13	14	A3J4-2
32	15	A3J4-1
	16	
	17	
71	18	A3J4-9
74	19	A3J4-8
85	20	VJ1-14
31	21	VJ1-13
72	22	VJ1-12
67	23	VJ1-11
	24	
51	25	VJ1-10
25	26	VJ1-9
38	27	VJ1-8
62	28	VJ1-7

J4 — TO

	1	
78	2	A3J9-5
21	3	A3J9-6
23	4	A3J9-7
72	5	A3J9-10
27	6	A3J9-9
25	7	A3J9-8
	8	
	9	
61	10	A3J9-4
	11	
14	12	A3J8-8
	13	
	14	KEY
90	15	ØA FROM PLAYFIELD
96	16	A3J8-11
54	17	A3J8-12
94	18	A3J8-18
81	19	A3J8-19

J2 — TO

51	1	ST0 PLAY FIELD
70	2	ST1 SW
93	3	ST2 STROBE
53	4	ST3
31	5	ST4
	6	KEY
	7	N U
54	8	I0 VJ1 4
63	9	I1 VJ1 24
67	10	I2 VJ1 22
78	11	I3 VJ1 17
60	12	I4 VJ1 16
56	13	I5 VJ1 19
65	14	I6 VJ1 23
52	15	I7 VJ1 25

J3 — TO

10	1	SELF TEST SW.
51	2	ST 0 SW. CAB.
70	3	ST 1 STROBE
	4	KEY
	5	N U
	6	N U
	7	N U
	8	N U
54	9	I 0
63	10	I 1
57	11	I 2
78	12	I 3 CONTROL PANEL CAB. SW. RET.
	13	I 4
56	14	I 5
65	15	I 6
52	16	I 7

TO LOWER CABINET TO PLAYFIELD

NOTES:
1. THESE PINS ARE RESERVED FOR FUTURE USE.
2. WIRE COLOR ARE SHOWN FOR ALL CONNECTOR PINS, SOME WIRE MAY NOT BE USED IN ALL GAMES.
3. * INDICATES A/D TEST POINT.
4. ALL DIODES 1N4148 UNLESS OTHERWISE NOTED.

P.C.B. ABBREVIATION
A1 - N/U
A2 - POWER MODULE (PS)
A3 - COMBO BD. (I)
V - VIDIOT
M - MONITOR

WIRE COLOR CODE	
1-RED	6-BROWN
2-BLUE	7-ORANGE
3-YELLOW	8-BLACK
4-GREEN	9-GRAY
5-WHITE	0-NO TRACER

OPER.	DEPT.	DESCRIPTION	TOOL No.

NO.	LET.	CHANGE	DATE	BY

ALL DESIGN, OPERATIVE AND PROCESS DATA PERTAINING TO THE ARTICLE SHOWN ON THIS SHEET IS THE PROPERTY OF BALLY MFG. CORP. CHICAGO ILL. THIS INFORMATION IS DISCLOSED IN CONFIDENCE AND IS NOT TO BE COPIED, REPRODUCED, REVEALED TO OR APPROPRIATED BY OTHERS IN PART OR IN WHOLE WITHOUT THE EXPRESS CONSENT OF THE OWNERS. THE PRINT IS LOANED AND MUST NOT BE USED IN ANY MANNER DETRIMENTAL TO THE INTEREST OF THE OWNERS AND MUST BE RETURNED ON DEMAND.

REMOVE ALL BURRS
TOLERANCES ON DIMENSIONS UNLESS OTHERWISE SPECIFIED
FRACTIONS ± .1/8
DECIMALS ± .XX
EXCEPT HOLE DIA'S
ANGLES ±
DO NOT SCALE DRAWING

DR BY A. DATE 10-15-82
CK BY DATE 5-26-83
APD BY DATE
APD BY DATE

Bally MANUFACTURING CORP.
2640 BELMONT AVENUE
CHICAGO, ILLINOIS
#1299

PRINT CONTAIN A

NAME WIRING DIAGRAM VIDEO - PIN CABINET
ASSEM NO USED
SCALE
MATERIAL BABY PAC-MAN
CODE
PART NO W-1282 - C

L PART NO. W-1282 C

G PART NO. W-1284 b

AS-2877-11 TRANSFORMER POWER ASSEMBLY

AS-3071-12 TRANSFORMER ASSEMBLY

AS-2518-132 POWER MODULE

CABINET WIRING

OFF
VR1
FL1
ON
SERVICE OUTLET
BACK DOOR INTERLOCK

JUMPERS SHOWN FOR 115 VAC
(SEE TABLE A FOR OTHER VOLTAGES)

J1

1 — F1 3A, SB — BLK — COMMON
2
12 SPARE
3 — 115 VAC — ORN/BLK
4 — 120 VAC — WH/BLK
5
6 — RED/BLK — COMMON
7
8 — RED/YEL
9 — 100 VAC
10 — 115 VAC — BLK/BLU
11 — 120 VAC — WHT

NOTE 1

T1

YEL — 6.5 VAC — YEL/BLK

J5

1 — PLAYFIELD F5, 15A
4 — F6, 15A BACKBOX
7
8

2 — F2, 3 4A — 1N4004 (4) — CR2, CR1, CR3, CR4 — 3

GRN — 6 — F4, 5A SEE NOTE 2 — 49 VAC — ORN — 9
VR1, 600 OHM R1, BR2

J6

1 — F1, 20A
4
2 — 25 OHM R2, BR1 — 5

BLU — 3 — F3, 4A — 14.2 VAC — BLU — 6
CR6, CR5, CR8, CR7

PURPLE — 20 — 8A SW. ILL.
15-7
PURPLE — 90 — 8B SW. ILL.
90
120 VAC — 90 — TO MONITOR

TO PLAYFIELD

TP4 6.5 VAC (G1)

TP2 +230 VDC (UNREG. 190) — R3 100K

TP5 +43 VDC, (SOL)

TP1 6.5 VDC (SW. 1L)

TP3 11.9 VDC (UNREG. 5)

GND

J3 (BACK BOX)

1	5V FILTER RETURN
2	SW. LAMP RETURN
3	SW. LAMP RETURN
4	SW. LAMP RETURN
5	5V REGULATOR RETURN
6	N/U
7	N/U
8	FLIPPER RELAY, +43
9	N/U
10	+5V REGULATOR INPUT
11	N/U
12	SOLENOID BUS +43

J4 (BACK BOX)

1	GEN. ILL. RETURN
2	SOLENOID BUS RETURN
3	SOLENOID BUS RETURN
4	GEN. ILL. RETURN
5	SPARE
6	N/U
7	SPARE GND
8	GEN. ILL. BUS
9	GEN. ILL. BUS

J2 (LOWER CABINET)

1	POWER LINE GND
2	FLIP SW. RETURN
3	GEN. ILL. RETURN
4	SOLENOID BUS, +43
5	SPARE
6	GEN. ILL. BUS

J1 (PLAYFIELD)

1	GEN. ILL. BUS
2	SPARE
3	GEN. ILL. RETURN
4	GEN. ILL. BUS
5	N/U
6	GEN. ILL. RETURN
7	SOLENOID BUS, +43
8	N/U
9	SPARE GND

TABLE 'A'

115 VAC, 2-8, 3-6, 7-10
120 VAC, 2-8, 4-6, 7-11
220 VAC, 4-8, 7-9
240 VAC, 4-8, 7-11

ALL DESIGN, OPERATIVE AND PROCESS DATA PERTAINING TO THE ARTICLE SHOWN ON THIS SHEET IS THE PROPERTY OF BALLY MFG. CORP., CHICAGO, ILL. THIS INFORMATION IS DISCLOSED IN CONFIDENCE AND IS NOT TO BE COPIED, REPRODUCED, REVEALED TO OR APPROPRIATED BY OTHERS, IN PART OR IN WHOLE, WITHOUT THE EXPRESS CONSENT OF THE OWNERS. THE PRINT IS LOANED AND MUST NOT BE USED IN ANY MANNER DETRIMENTAL TO THE INTEREST OF THE OWNERS, AND MUST BE RETURNED ON DEMAND.

OPER.	DEPT.	DESCRIPTION	TOOL NO.

NO.	LET.	CHANGE	DATE	BY

REMOVE ALL BURRS

TOLERANCES ON DIMENSIONS UNLESS OTHERWISE SPECIFIED
FRACTIONS ± 008
DECIMALS ± .003
EXCEPT HOLE DIA'S
ANGLES ± 1/2°

DO NOT SCALE DRAWING

DR. BY A.	DATE 10-25-82	
CK. BY	DATE 10-26-82	
AP'D BY	DATE	
AP'D BY	DATE 10-26-82	

Bally MANUFACTURING CORP.
2640 BELMONT AVENUE
CHICAGO, ILLINOIS
1299

PRINT CONTROL A

NAME: POWER SUPPLY SCHEMATIC
ASSEM. NO. USED: AS-2518-132
SCALE: 4

MATERIAL CODE: BABY PAC-MAN
PART NO.: W-1284 b

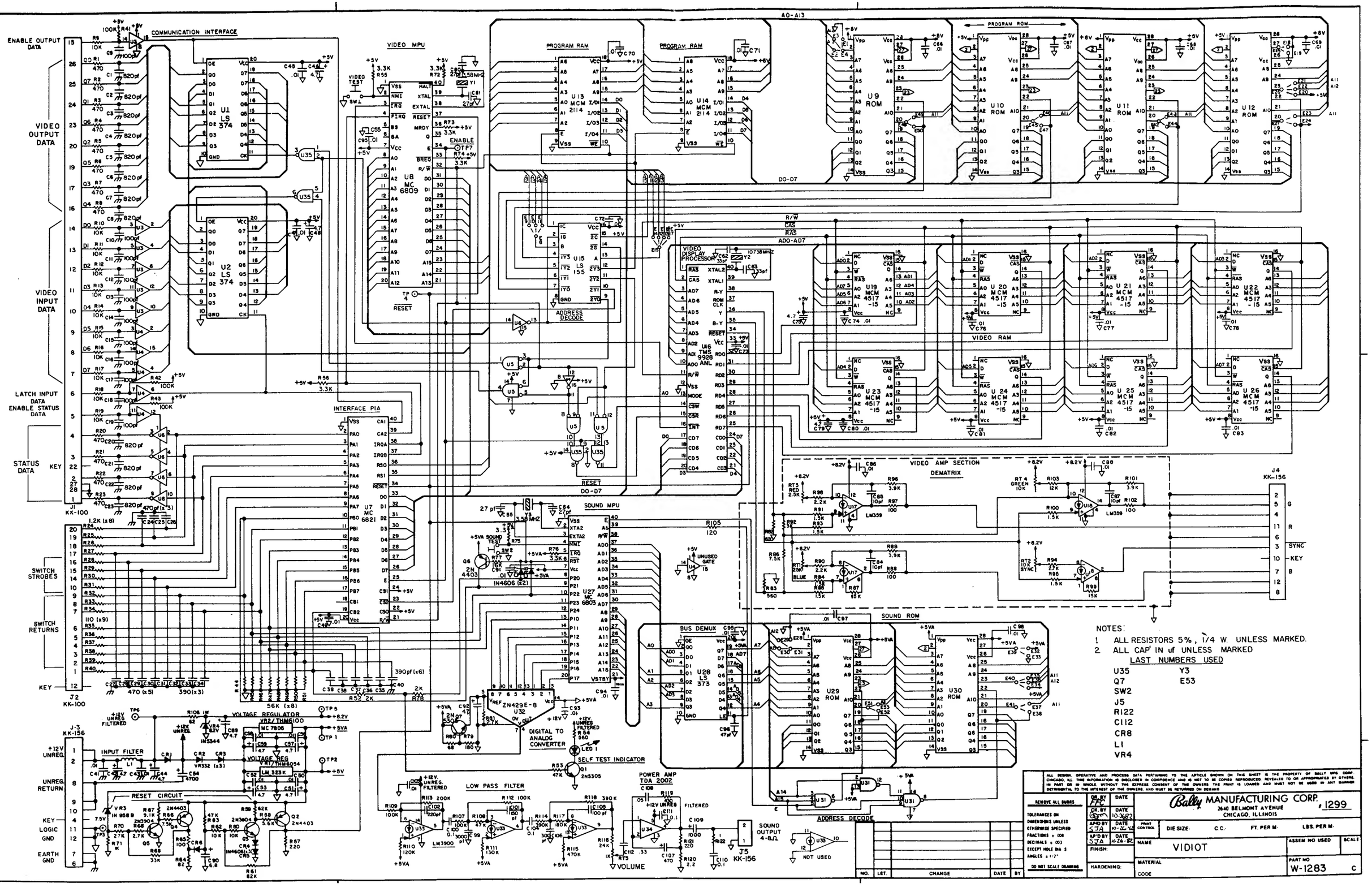

NOTES:

1. ALL RESISTORS 5%, 1/4 W. UNLESS MARKED.
2. ALL CAP' IN uf UNLESS MARKED

LAST NUMBERS USED

U35	Y3
Q7	E53
SW2	
J5	
R122	
C112	
CR8	
L1	
VR4	

ALL DESIGN, OPERATIVE AND PROCESS DATA PERTAINING TO THE ARTICLE SHOWN ON THIS SHEET IS THE PROPERTY OF BALLY MFG. CORP. CHICAGO, ILL. THIS INFORMATION IS DISCLOSED IN CONFIDENCE AND IS NOT TO BE COPIED REPRODUCED, REVEALED TO OR APPROPRIATED BY OTHERS, IN PART OR IN WHOLE, WITHOUT THE EXPRESS CONSENT OF THE OWNERS. THE PRINT IS LOANED AND MUST NOT BE USED IN ANY MANNER DETRIMENTAL TO THE INTEREST OF THE OWNERS, AND MUST BE RETURNED ON DEMAND.

REMOVE ALL BURRS

TOLERANCES ON DIMENSIONS UNLESS OTHERWISE SPECIFIED
FRACTIONS ± .008
DECIMALS ± .003
EXCEPT HOLE DIA. ±
ANGLES ± 1/2°

DO NOT SCALE DRAWING

DR. BY FFC	DATE	
CK. BY	DATE 10-26-82	
APD BY SJA	DATE 10-26-82	
AP'D BY SJA	DATE 10-26-82	
FINISH:		
HARDENING:		

Bally MANUFACTURING CORP.
2640 BELMONT AVENUE
CHICAGO, ILLINOIS

#1299

PRINT CONTROL | DIE SIZE: | C.C.: | FT. PER M: | LBS. PER M:

NAME: VIDIOT

ASSEM NO USED | SCALE

MATERIAL | CODE

PART NO W-1283 C

NO.	LET.	CHANGE	DATE	BY

W-1181-4c

P/O J4

SW. ILL. gA
11.9 V.D.C. UNREG.
+ 5 V.D.C.
+ 5 V.D.C.
GRD.
GRD.
KEY
N.C.
N.C.

CR52
L1 .22µH
L2 .22µH
C1 820pf
C2 820pf
C3 .01µf
C4
C5 4.7µf (2X)
C6 C7 C8 C9 C10 C11 C12 .01µf (6X)
R131 1K
TP1
TP3
TP4
TP5
TP2
21.8 V.D.C.

CR7 IN4148
CR5 IN4148
R11 82 (1W)
R12 270
3.6VDC BT1
C13 .01
VAUX TO U8

VALID POWER DETECTOR
R140 20K
R136 47K
Q5 2N4403
Q1 2N3904
R139 24K
IN9598 8.2V
VR1
R1 8.2K
R3 8.2K
R2 120K
R112 1K
2.8 VDC
.7 VDC
.3 V.D.C.

5 V.D.C.
R4 5.6K
R10 5.6K
C14 470pf
C18 470pf
CLOCK
R5 2K
U16A
U16B
2.2 V.D.C.
2.3 V.D.C.
2.2 VDC
ø2
ø1
U15B
R9 20
R7 1K
U15A
R6 1K
R8 20
2.6 V.D.C.
CLOCK BUFFERS ø2

R13 3.3K
S33
ACTIVITY

R18 1.5M
R17 150K
4.9VDC
R16 2K
CR49
U14A
.25V.D.C.
U14B
ZERO CROSSING DETECTOR
4.5 V.D.C.
U14C
.25V.D.C.

J5
A14
GND
+5
KEY
EXT. MEM.
ø2
R/W
VMA
4.4VDC
R15 30K
MEM. EN-ABLE
3.0 V.D.C.
U19B
1.2 V.D.C.
U14D
5 V.D.C.
U15C
3V.D.C.
U15D
2.2 V.D.C.
R137 150
1.8 V.D.C.
R134 4.7K
ø2

2.4 V.D.C.
2.6 V.D.C.
TP7
U9
6800
R136 3.3K
R135 30K
3.0 V.D.C.
4.3 V.D.C.
4.8 V.D.C.
4.8 V.D.C.
4.8 V.D.C.

HALT
ø2
IRQ
VUA-ø2
R/W
RESET
VMA

6820/6821
U10
CB1
CB2
R20 3.3K
R19 1.2K
CB1 .01

PA 7 PA 6 PA 5
CR 11 CR 19 CR 27 CR 35 CR 42
IN4148 TYP (X32)
S32 S25 S24 S17 S16 S9 S8 S1
R39 R46 56K TYP (X 8)
R31 R38 3.3K TYP (X 8)

1.2K TYP (X13)
J2 *
PB 0
R47
PB 7
390pf TYP (X 8)
C19 C26
R54
PLAYFIELD SWITCH RETURN

PA 0
CR43 IN4148 TYP (X5)
CR1
PA4 CR4
R133
R55 ST0
R56 ST2
R57 ST3
R58 ST4
PLAYFIELD SWITCH STROBES
R108
R111
R132
56K TYP (X 5)
C79 390pf TYP (X5)
C30 C27

J3 *
R59 110
R60 ST0
ST1
SELF TEST SWITCH
CABINET SW. STROBES
PB 0
PB 7
390pf TYP (X10)
C40
R69
CABINET SWITCH RETURNS
C32 .003 µf
C31
1.2K TYP (X 18)

J1 *
PA 0
PA 7
470pf TYP (X 8)
C48 C41
C33 C78
R70 AD0 AD1 AD2 AD3 PD0 PD1 PD2 PD3
R77
LAMP ADDRESS
LAMP DATA

CB 2
R78 1.2K
R79 1.2K
C49 C50 470pf (X2)
LAMP STROBE #1
LAMP STROBE #2

DISPLAY INTERRUPT GENERATOR
R21 36K
R23 1K
R22 4.7K
C16 .1
555
U12
2.6 V.D.C.
4.5 V.D.C.
3.3V.D.C.
C17 .01

2.5 V.D.C. TYP
PA0 U20A
PA1 U20B
PA2 U20C
PA3 U20D
U11E
PA4
PA7
R80 D0 D1 D2 D3 #1 #2 #3 #4 #5
R89
C60 C51
DISPLAY SEGMENT (BCD) DATA
DISPLAY LATCH STROBE
DISPLAY BLANKING

U20F
U14E
+6V
U19A
-4V.D.C.
4.5 VDC
4.8
2.3 V.D.C.
IN4148
CR6
R30 270K
C18 .05
1.2K TYP (X17)
470pf TYP (X17)
PA1
PA7
PA0
R90 #6 #5 #4 #3 #2 #1
R96
C67 C61
SOUND MODULE ADDRESS "E"
DISPLAY DIGIT ENABLE

6820/6821
U11
PB0
PB1
PB2
PB3
PB4
PB5
PB6
PB7
CB1
CB2
R24 8.2K
R107 3.3K
R29 470 1/2W
CR8
GREEN L.E.D.
CR44 IN4004
TP6
R28 8.2K
Q2 2N3904
11 UNREG
470 TYP (X 4)
R97
P/O J4
PB0
PB7
C77
C68
820pf TYP (X9)
R106 470
330Ω
MOMENTARY SOLENOID/ SOUND DATA *
CONTINUOUS SOLENOID DATA (NOTE 2)
SOLENOID BANK/ SOUND SELECT *

DATA
ADDRESS
DATA BUS
ADDRESS BUS
A11
VUA-ø2-A12

5.1K TYP (X 4)
3.6 K TYP (X 4)
R114
R121
D0 D7
A0 A8
R122 R130
47K TYP (X 9)
CR 45 CR 46
E36 VUA-ø2-A12
E12
E10 U17B
E20 E24 E23 E25 E21 E22
E9 E11 E13 E13A E14 E15
E1 E2 E3 E4 E5 E6
A9 A14 A11
U17A R14 10K
E34 E33
U18F
E16 E16A E17 E18 E19
U18A U18C U18D
U17C U17D U19C U19D U18E
A14 U14A
A12 A11 A9
AIO E28 E29 E27 E26 E30
9316A
9316A
9316A
9316A
6810
5101L-3
VAUX
D7 D6 D5

U1 U2 U3 U4 U5 U6 U7 U8

READ ONLY MEMORY (NOTE 4)
READ / WRITE MEMORY

NOTES

1. * INDICATES "AID" TEST POINT.
2. REMOVE A3J4 BEFORE USING AS AID TEST POINT
3. PREFIX ALL REFERENCE DESIGNATIONS WITH "A4"
4. EXACT CHIP COMPLEMENT USED IN SOCKETS U1 THRU U6 CAN VARY FOR DIFFERENT GAMES AND PRODUCTION LOTS. TABLES OF MEMORY CHIPS AND CORRESPONDING JUMPERS FOR DIFFERENT GAMES AVAILABLE FROM BALLY FIELD SERVICE DEPARTMENT.

ALL DESIGN, OPERATIVE AND PROCESS DATA PERTAINING TO THE ARTICLE SHOWN ON THIS SHEET IS THE PROPERTY OF BALLY MFG. CORP. CHICAGO ILL. THIS INFORMATION IS DISCLOSED IN CONFIDENCE AND IS NOT TO BE COPIED, REPRODUCED, REVEALED TO OR APPROPRIATED BY OTHERS IN PART OR IN WHOLE WITHOUT THE EXPRESS CONSENT OF THE OWNERS. THE PRINT IS LOANED AND MUST NOT BE USED IN ANY MANNER DETRIMENTAL TO THE INTEREST OF THE OWNERS AND MUST BE RETURNED ON DEMAND.

REMOVE ALL BURRS
TOLERANCES ON DIMENSIONS UNLESS OTHERWISE SPECIFIED
FRACTIONS ± 1/64
DECIMALS ± .005
ANGLES ± 1°
DO NOT SCALE DRAWING

NO.	LET.	CHANGE	DATE	BY	CK.

DR. BY | DATE
CK. BY | DATE
APP'D BY | DATE
APP'D BY | DATE
FINISH
HARDENING

Bally MANUFACTURING CORP.
2640 BELMONT AVENUE
CHICAGO, ILLINOIS
1299

NAME: M.P.U. CONTROL BOARD SCHEMATIC
ASSEM NO USED ON
MATERIAL
PART NO W-1181-4c